Multi model application Technical data book

4MXM-N9

4MXM68N2V1B9
4MXM80N2V1B9

EEDEN20

Table of contents

4MXM-N9

1	Features	4
	4MXM-N9	4
2	Specifications	5
3	Electrical data	7
4	Combination table	8
5	Capacity tables	29
	Capacity Table Legend	29
6	Dimensional drawings	30
7	Centre of gravity	31
8	Piping diagrams	32
9	Wiring diagrams	33
	Wiring Diagrams - Single Phase	33
10	Sound data	34
	Sound Pressure Spectrum	34
11	Operation range	35

1 Features

1 - 1 4MXM-N9

1

- Seasonal efficiency values up to A+++ in cooling and A++ in heating thanks to its up-to-date technology and built-in intelligence
- Up to 4 indoor units can be connected to 1 multi outdoor unit; all indoor units are individually controllable and do not need to be installed in the same room or at the same time. They operate simultaneously within the same heating or cooling mode.
- Choosing for an R-32 product, reduces the environmental impact with 68% compared to R-410A and leads directly to lower energy consumption thanks to its high energy efficiency
- Different types of indoor units can be connected: e.g. wall mounted, ceiling mounted cassette corner, concealed ceiling unit
- Outdoor units are fitted with a swing compressor, renowned for its low noise and high energy efficiency

Inverter

2 Specifications

1 - 1 4MXM-N9

Technical specifications					4MXM68N9	4MXM80N9
Casing	Colour				Ivory white	
Dimensions	Unit	Height		mm	734	
		Width		mm	958	
		Depth		mm	340	
	Packed unit	Height		mm	820	
		Width		mm	1,050	
		Depth		mm	480	
Weight	Unit			kg	63.0	67.0
	Packed unit			kg	67.0	71
Heat exchanger	Length			mm	920	
	Rows	Quantity			2	
	Fin pitch			mm	1.40	
	Stages	Quantity			32	
	Passes	Quantity			6.4	6
	Tube type				Hi-XA	
	Tube diameter			mm	8	7
	Fin	Type			WHS8 FIN-HYDROPHILIC	
		Treatment			Anti-corrosion treatment	
Heat exchanger 2	Length			mm	-	650
	Rows	Quantity			-	1
	Fin pitch			mm	-	1.80
	Stages	Quantity			-	12
Fan	Type				Propeller	
	Air flow rate	Cooling	High	m^3/min	46.5	49.1
				cfm	1,642	1,733
			Nom.	m^3/min	42.5	45.2
				cfm	1,501	1,596
			Silent operation	m^3/min	24.1	
				cfm	851	
		Heating	High	m^3/min	43.8	47.8
				cfm	1,547	1,688
			Nom.	m^3/min	43.8	43.9
				cfm	1,547	1,550
			Silent operation	m^3/min	24.1	
				cfm	851	
Fan motor	Quantity				1	-
	Model				D55F-31	-
	Output			W	55	128
	Speed	Cooling	High	rpm	760	800
			Medium	rpm	700	740
			Low	rpm	-	420
			Super low	rpm	420	-
		Heating	High	rpm	720	780
			Low	rpm	-	420
			Super low	rpm	420	-
			Medium	rpm	720	780
Compressor	Quantity				1	
	Model				2YC71DXD#C	
	Oil Amount			cm^3	900	
	Type				Hermetically sealed swing compressor	
	Output			W	2,400	
	Oil Type				FW68DA	
Operation range	Cooling	Ambient	Min.	°CDB	-10	
			Max.	°CDB	46	
	Heating	Ambient	Min.	°CDB	-15	
			Max.	°CDB	24	
Sound power level	Cooling			dBA	61.0	
	Heating			dBA	61.0	
Sound pressure level	Cooling	Nom.		dBA	48.0	
	Heating	Nom.		dBA	49.0	
Refrigerant	Type				R-32	
	Charge			kg	2.00	2.40
	Charge			TCO2Eq	1.35	1.62
	GWP				675.0	

2 Specifications

1 - 1 4MXM-N9

2

Technical specifications					4MXM68N9	4MXM80N9
Piping connections	Liquid	Quantity			4	
		OD		mm	6,35	6.4
	Gas	Quantity			2	4
		OD		mm	9.50	
	Drain	Quantity			1	
		OD		mm	16	
	Gas 2	Quantity			2	1
		OD		mm	12.70	
	Gas 3	Quantity			-	2
		OD		mm	-	15.90
	Piping length	OU - IU	Min.	m	3 (1)	
			Max.	m	25 (1)	
		System	Chargeless	m	30	
	Additional refrigerant charge			kg/m	0.02 (for piping length exceeding 30m)	
	Level difference	IU - OU	Max.	m	15.0	
		IU - IU		m	7.5	
	Total piping length	System	Actual	m	60	70
Capacity control	Method				Variable (inverter)	

Standard accessories: Installation manual; Quantity: 1;

Standard accessories: Screw bag; Quantity: 1;

Standard accessories: Drain plug; Quantity: 1;

Standard accessories: Reducer assembly; Quantity: 1;

Standard accessories: Drain cap (1); Quantity: 6;

Standard accessories: Drain cap (2); Quantity: 3;

Electrical specifications				4MXM68N9	4MXM80N9
Power supply	Phase			1~	
	Frequency		Hz	50	
	Voltage		V	220-240	
Wiring connections	For power supply	Quantity		3	
		Remark		Earth wire included	
	For connection with indoor	Quantity		4	
		Remark		Earth wire included	

(1)For one room |
See separate drawing for operation range |
See separate drawing for electrical data |
Contains fluorinated greenhouse gases

3 Electrical data

3 - 1 Electrical Data

2MXM68N / 3MXM-N9 / 3AMXM-N9 / 3AMXF-A9 / 3MXF-A9 / 4MXM-N9 / 5MXM-N9

Outdoor unit	Power supply			·RA· indoor units (·10·% safety factor) See note ·5·.		·RA· indoor units (·10·% safety factor) See note ·5·.		COMP		OFM	
Model name	Hz	Voltage	Voltage range	MCA	MFA	MCA	MFA	RHz	RLA	kW	FLA
2MXM68N2V1B	50	220	MAX. 50Hz 264V MIN. 50Hz 198V	16,94	20	19,80	20	-	7,8	0,056	0,37
	50	230							7,5		
	50	240							8,7		
3MXM40N2V1B9	50	220	MAX. 50Hz 264V MIN. 50Hz 198V	14,31	16	15,97	16	-	2,9	0,056	0,37
	50	230							3,0		
	50	240							3,1		
3MXM52N2V1B9	50	220	MAX. 50Hz 264V MIN. 50Hz 198V	14,59	20	16,27	20	-	4,5	0,056	0,37
	50	230							4,7		
	50	240							4,9		
3MXM68N2V1B9	50	220	MAX. 50Hz 264V MIN. 50Hz 198V	17,19	20	19,81	20	-	8,0	0,056	0,37
	50	230							8,4		
	50	240							8,7		
4MXM68N2V1B9	50	220	MAX. 50Hz 264V MIN. 50Hz 198V	17,36	20	19,81	20	-	7,0	0,056	0,37
	50	230							7,3		
	50	240							7,6		
4MXM80N2V1B9	50	220	MAX. 50Hz 264V MIN. 50Hz 198V	17,04	25	20,36	25	-	8,5	0,075	0,50
	50	230							8,9		
	50	240							9,3		
5MXM90N2V1B9	50	220	MAX. 50Hz 264V MIN. 50Hz 198V	21,70	32	25,88	32	-	9,2	0,075	0,50
	50	230							9,6		
	50	240							10,0		
3AMXM52N2V1B9	50	220	MAX. 50Hz 264V MIN. 50Hz 198V	18,19	20	16,27	20	-	4,5	0,056	0,37
	50	230							4,7		
	50	240							4,9		
3MXF52A2V1B9	50	220	MAX. 50Hz 264V MIN. 50Hz 198V	14,59	20	16,27	20	-	4,5	0,056	0,37
	50	230							4,7		
	50	240							4,9		
3AMXF52A2V1B9	50	220	MAX. 50Hz 264V MIN. 50Hz 198V	14,59	20	16,27	20	-	4,5	0,056	0,37
	50	230							4,7		
	50	240							4,9		
3MXF68A2V1B9	50	220	MAX. 50Hz 264V MIN. 50Hz 198V	17,19	20	19,81	20	-	8,0	0,056	0,37
	50	230							8,4		
	50	240							8,7		

Notes

1) The ·RLA· is based on the following conditions.
   Outdoor temperature ·35·°C DB
   Indoor temperature ·27·°C DB / ·19·°C WB
2) Select the wire size according to the MCA.
3) The maximum allowable voltage that is unbalanced between phases is ·2·%.
4) Use a circuit breaker instead of a fuse.
5) Only for wall-mounted ·FVXM· units.

Symbols

MCA: Minimum Circuit Ampere [A]
MFA: Maximum Fuse Ampere [A]
RLA: Rated load amps [A]
OFM: Outdoor fan motor
MSC: Maximum starting current
FLA: Full Load Ampere [A]
kW: Fan motor rated output [kW]

3D129421A

4 Combination table

4 - 1 Combination Table

4

4MXM68N9

Cooling ·(50Hz 230V)·

Outdoor unit	Indoor unit	Cooling capacity [kW]				Total capacity [kW]			Power input [kW]			Total current [A]			Power factor [%]
		Room ·A·	Room ·B·	Room ·C·	Room ·D·	Min.	Nom.	Max.	Min.	Nom.	Max.	Min.	Nom.	Max.	
4MXM68N2V1B 4MXM68N2V1B9	1,5	1,60	---	---	---	1,57	1,60	2,49	0,40	0,42	0,59	1,82	1,98	2,71	95
	2,0	2,00	---	---	---	1,65	2,00	2,68	0,42	0,43	0,60	1,91	2,08	2,75	95
	2,5	2,50	---	---	---	1,74	2,50	3,44	0,44	0,55	0,82	2,00	2,62	3,77	95
	3,5	3,50	---	---	---	1,93	3,50	4,86	0,46	0,80	1,43	2,09	3,84	6,53	95
	4,2	---	---	4,20	---	1,93	4,20	5,33	0,46	0,82	1,44	2,09	3,93	6,57	95
	5,0	---	---	5,00	---	1,94	5,00	6,03	0,44	1,50	2,13	2,00	7,20	9,77	95
	6,0	---	---	6,00	---	1,94	6,00	6,51	0,44	1,52	2,13	2,00	7,29	9,77	95
	1.5+1.5	1,50	1,50	---	---	1,95	3,00	4,79	0,40	0,60	1,15	1,81	2,75	5,25	95
	1.5+2.0	1,50	2,00	---	---	1,95	3,50	4,96	0,40	0,74	1,22	1,81	3,38	5,58	95
	1.5+2.5	1,50	2,50	---	---	1,95	4,00	5,28	0,40	0,89	1,36	1,81	4,08	6,23	95
	1.5+3.5	1,50	3,50	---	---	1,95	5,00	6,17	0,39	1,24	1,83	1,77	5,68	8,39	95
	1.5+4.2	1,50	4,20	---	---	1,95	5,70	6,39	0,39	1,51	1,96	1,77	6,90	8,96	95
	1.5+5.0	1,50	---	5,00	---	1,95	6,50	7,08	0,38	1,78	2,23	1,73	8,14	10,22	95
	1.5+6.0	1,36	---	5,44	---	1,96	6,80	7,59	0,37	1,93	2,36	1,68	8,82	10,79	95
	2.0+2.0	2,00	2,00	---	---	1,95	4,00	5,12	0,40	0,89	1,29	1,81	4,08	5,91	95
	2.0+2.5	2,00	2,50	---	---	1,95	4,50	5,44	0,40	1,06	1,43	1,81	4,86	6,56	95
	2.0+3.5	2,00	3,50	---	---	1,95	5,50	6,30	0,39	1,39	1,91	1,77	6,38	8,76	95
	2.0+4.2	2,00	4,20	---	---	1,95	6,20	6,51	0,39	1,70	2,05	1,77	7,77	9,37	95
	2.0+5.0	1,94	---	4,86	---	1,95	6,80	7,26	0,38	1,90	2,36	1,73	8,68	10,79	95
	2.0+6.0	1,70	---	5,10	---	1,96	6,80	7,71	0,37	1,92	2,45	1,68	8,78	11,20	95
	2.5+2.5	2,50	2,50	---	---	1,95	5,00	6,10	0,41	1,20	1,78	1,89	5,51	8,15	95
	2.5+3.5	2,50	3,50	---	---	1,95	6,00	6,57	0,40	1,54	2,11	1,81	7,03	9,65	95
	2.5+4.2	2,50	4,20	---	---	1,95	6,70	6,95	0,40	1,79	2,38	1,81	8,21	10,88	95
	2.5+5.0	2,27	---	4,53	---	1,95	6,80	7,37	0,37	1,78	2,45	1,68	8,15	11,20	95
	2.5+6.0	2,00	---	4,80	---	1,96	6,80	7,71	0,35	1,76	2,45	1,60	8,06	11,20	95
	3.5+3.5	3,40	3,40	---	---	1,95	6,80	7,13	0,38	1,73	2,37	1,73	7,90	10,83	95
	3.5+4.2	3,09	3,71	---	---	1,95	6,80	7,24	0,38	1,72	2,46	1,73	7,87	11,24	95
	3.5+5.0	2,80	---	4,00	---	1,95	6,80	7,76	0,35	1,68	2,78	1,60	7,71	12,71	95
	3.5+6.0	2,51	---	4,29	---	2,26	6,80	8,07	0,40	1,67	2,72	1,81	7,63	12,46	95
	4.2+4.2	3,40	3,40	---	---	1,95	6,80	7,14	0,38	1,71	2,37	1,73	7,84	10,83	95
	4.2+5.0	3,10	---	3,70	---	1,95	6,80	7,77	0,35	1,68	2,78	1,60	7,68	12,71	95
	4.2+6.0	2,80	---	4,00	---	2,26	6,80	8,08	0,40	1,66	2,72	1,81	7,60	12,46	95
	5.0+5.0	---	---	3,40	3,40	2,34	6,80	8,22	0,43	1,64	2,98	1,98	7,52	13,65	95
	5.0+6.0	---	---	3,09	3,71	2,47	6,80	8,45	0,44	1,63	2,92	2,02	7,44	13,36	95
	1.5+1.5+1.5	1,50	1,50	1,50	---	1,96	4,50	6,40	0,39	0,61	1,57	1,77	2,80	7,17	95
	1.5+1.5+2.0	1,44	1,44	1,92	---	1,96	4,80	6,56	0,39	0,70	1,65	1,77	3,21	7,54	95
	1.5+1.5+2.5	1,36	1,36	2,27	---	1,96	5,00	6,72	0,39	0,80	1,73	1,77	3,67	7,90	95
	1.5+1.5+3.5	1,50	1,50	3,50	---	1,96	6,50	7,11	0,38	1,56	1,92	1,73	7,14	8,80	95
	1.5+1.5+4.2	1,42	1,42	3,97	---	1,96	6,80	7,33	0,38	1,80	2,05	1,73	8,24	9,37	95
	1.5+1.5+5.0	1,28	1,28	4,25	---	1,96	6,80	7,74	0,36	1,75	2,22	1,64	8,01	10,14	95
	1.5+1.5+6.0	1,13	1,13	4,53	---	2,31	6,80	7,99	0,40	1,73	2,17	1,85	7,92	9,94	95
	1.5+2.0+2.0	1,50	2,00	2,00	---	1,96	5,50	6,48	0,39	1,01	1,61	1,77	4,63	7,37	95
	1.5+2.0+2.5	1,50	2,00	2,50	---	1,96	6,00	6,87	0,39	1,32	1,81	1,77	6,05	8,27	95
	1.5+2.0+3.5	1,46	1,94	3,40	---	1,96	6,80	7,25	0,38	1,80	2,01	1,73	8,24	9,21	95

Notes

1. The total capacity of each connected indoor unit is up to ·11.0·kW.
2. The values above are for connecting with the following indoor unit types:
   ·1.5,2.0,2.5,3.5,4.2,5.0,6.0· kW class
   Wall-mounted ·CTXM-M, CTXM-N, CTXM-R, FTXM-M, FTXM-N, FTXM-R· series
3. Cooling capacity conditions
   Indoor temperature ·27·°C DB / ·19·°C WB
   Outdoor temperature ·35·°C DB
4. For additional information on the connection of the DHW generator for Multi and the Hybrid for Multi, see ·3D106169·.

3D105385A

4 Combination table

4 - 1 Combination Table

4MXM68N9

Cooling ·(50Hz 230V)·

Outdoor unit	Indoor unit	Cooling capacity [kW]				Total capacity [kW]			Power input [kW]			Total current [A]			Power factor [%]
		Room ·A·	Room ·B·	Room ·C·	Room ·D·	Min.	Nom.	Max.	Min.	Nom.	Max.	Min.	Nom.	Max.	
4MXM68N2V1B 4MXM68N2V1B9	1.5+2.0+4.2	1,32	1,77	3,71	---	1,96	6,80	7,47	0,38	1,79	2,14	1,73	8,20	9,78	95
	1.5+2.0+5.0	1,20	1,60	4,00	---	1,96	6,80	7,87	0,36	1,74	2,31	1,64	7,97	10,55	95
	1.5+2.0+6.0	1,07	1,43	4,29	---	2,31	6,80	8,13	0,40	1,72	2,26	1,85	7,88	10,35	95
	1.5+2.5+2.5	1,50	2,50	2,50	---	1,96	6,50	7,10	0,38	1,63	1,92	1,73	7,46	8,80	95
	1.5+2.5+3.5	1,36	2,27	3,17	---	1,96	6,80	7,60	0,36	1,79	2,23	1,64	8,20	10,18	95
	1.5+2.5+4.2	1,24	2,07	3,48	---	1,96	6,80	7,81	0,36	1,78	2,35	1,64	8,15	10,75	95
	1.5+2.5+5.0	1,13	1,89	3,78	---	1,96	6,80	7,95	0,36	1,74	2,35	1,64	7,97	10,75	95
	1.5+2.5+6.0	1,02	1,70	4,08	---	2,31	6,80	8,42	0,41	1,71	2,44	1,89	7,83	11,16	95
	1.5+3.5+3.5	1,20	2,80	2,80	---	1,96	6,80	7,94	0,37	1,77	2,45	1,68	8,11	11,20	95
	1.5+3.5+4.2	1,11	2,59	3,10	---	1,96	6,80	8,13	0,37	1,76	2,58	1,68	8,06	11,81	95
	1.5+3.5+5.0	1,02	2,38	3,40	---	1,96	6,80	8,46	0,33	1,72	2,72	1,52	7,88	12,46	95
	1.5+3.5+6.0	0,93	2,16	3,71	---	2,31	6,80	8,56	0,41	1,70	2,53	1,89	7,79	11,57	95
	1.5+4.2+4.2	1,03	---	2,88	2,88	1,96	6,80	8,26	0,37	1,75	2,68	1,68	8,01	12,26	95
	1.5+4.2+5.0	0,95	---	2,67	3,18	1,96	6,80	8,53	0,33	1,71	2,77	1,52	7,83	12,67	95
	2.0+2.0+2.0	2,00	2,00	2,00	---	1,96	6,00	6,64	0,39	1,34	1,68	1,77	6,14	7,70	95
	2.0+2.0+2.5	2,00	2,00	2,50	---	1,96	6,50	7,03	0,39	1,63	1,89	1,77	7,46	8,64	95
	2.0+2.0+3.5	1,81	1,81	3,17	---	1,96	6,80	7,40	0,38	1,79	2,09	1,73	8,20	9,57	95
	2.0+2.0+4.2	1,66	1,66	3,48	---	1,96	6,80	7,61	0,38	1,78	2,23	1,73	8,15	10,18	95
	2.0+2.0+5.0	1,51	1,51	3,78	---	1,96	6,80	8,01	0,36	1,74	2,39	1,64	7,97	10,96	95
	2.0+2.0+6.0	1,36	1,36	4,08	---	2,31	6,80	8,27	0,40	1,71	2,35	1,85	7,83	10,75	95
	2.0+2.5+2.5	1,94	2,43	2,43	---	1,96	6,80	7,24	0,38	1,77	2,01	1,73	8,11	9,21	95
	2.0+2.5+3.5	1,70	2,13	2,98	---	1,96	6,80	7,74	0,36	1,76	2,31	1,64	8,06	10,55	95
	2.0+2.5+4.2	1,56	1,95	3,28	---	1,96	6,80	7,94	0,36	1,75	2,45	1,64	8,01	11,20	95
	2.0+2.5+5.0	1,43	1,79	3,58	---	1,96	6,80	8,08	0,36	1,71	2,44	1,64	7,83	11,16	95
	2.0+2.5+6.0	1,30	1,62	3,89	---	2,31	6,80	8,55	0,41	1,69	2,53	1,89	7,74	11,57	95
	2.0+3.5+3.5	1,51	2,64	2,64	---	1,96	6,80	8,07	0,37	1,74	2,54	1,68	7,97	11,61	95
	2.0+3.5+4.2	1,40	2,45	2,94	---	1,96	6,80	8,25	0,37	1,74	2,68	1,68	7,97	12,26	95
	2.0+3.5+5.0	1,30	2,27	3,24	---	2,28	6,80	8,58	0,40	1,69	2,82	1,85	7,74	12,91	95
	2.0+4.2+4.2	1,31	---	2,75	2,75	1,96	6,80	8,37	0,37	1,73	2,77	1,68	7,92	12,67	95
	2.5+2.5+2.5	2,27	2,27	2,27	---	1,96	6,80	7,53	0,38	1,76	2,18	1,73	8,06	9,98	95
	2.5+2.5+3.5	2,00	2,00	2,80	---	1,96	6,80	7,94	0,36	1,72	2,45	1,64	7,88	11,20	95
	2.5+2.5+4.2	1,85	1,85	3,10	---	1,96	6,80	8,12	0,36	1,71	2,58	1,64	7,83	11,81	95
	2.5+2.5+5.0	1,70	1,70	3,40	---	2,28	6,80	8,45	0,40	1,67	2,72	1,85	7,65	12,46	95
	2.5+2.5+6.0	1,55	1,55	3,71	---	2,42	6,80	8,74	0,40	1,65	2,67	1,85	7,56	12,22	95
	2.5+3.5+3.5	1,79	2,51	2,51	---	2,27	6,80	8,30	0,40	1,70	2,72	1,85	7,79	12,46	95
	2.5+3.5+4.2	1,67	2,33	2,80	---	2,27	6,80	8,43	0,40	1,69	2,82	1,85	7,74	12,91	95
	2.5+3.5+5.0	1,55	2,16	3,09	---	2,48	6,80	8,74	0,42	1,65	2,96	1,94	7,56	13,56	95
	2.5+4.2+4.2	1,56	---	2,62	2,62	2,27	6,80	8,49	0,40	1,68	2,87	1,85	7,69	13,12	95
	3.5+3.5+3.5	2,27	2,27	2,27	---	2,38	6,80	8,59	0,40	1,68	2,96	1,81	7,69	13,56	95
	1.5+1.5+1.5+1.5	1,65	1,65	1,65	1,65	1,97	6,60	7,09	0,38	1,38	1,63	1,73	6,32	7,45	95
	1.5+1.5+1.5+2.0	1,52	1,52	1,52	2,03	1,97	6,60	7,27	0,38	1,37	1,70	1,73	6,28	7,78	95
	1.5+1.5+1.5+2.5	1,41	1,41	1,41	2,36	1,97	6,60	7,45	0,36	1,35	1,78	1,64	6,18	8,15	95
	1.5+1.5+1.5+3.5	1,28	1,28	1,28	2,98	1,97	6,80	7,87	0,37	1,58	1,99	1,68	7,24	9,12	95
	1.5+1.5+1.5+4.2	1,17	1,17	1,17	3,28	1,97	6,80	8,04	0,37	1,58	2,07	1,68	7,24	9,49	95

Notes

1. The total capacity of each connected indoor unit is up to ·11.0·kW.
2. The values above are for connecting with the following indoor unit types:
   ·1.5,2.0,2.5,3.5,4.2,5.0,6.0· kW class
   Wall-mounted ·CTXM-M, CTXM-N, CTXM-R, FTXM-M, FTXM-N, FTXM-R· series
3. Cooling capacity conditions
   Indoor temperature ·27·°C DB / ·19·°C WB
   Outdoor temperature ·35·°C DB
4. For additional information on the connection of the DHW generator for Multi and the Hybrid for Multi, see ·3D106169·.

3D105389A

4 Combination table

4 - 1 Combination Table

4MXM68N9

Cooling ·(50Hz 230V)·

Outdoor unit	Indoor unit	Cooling capacity [kW]				Total capacity [kW]			Power input [kW]			Total current [A]			Power factor [%]
		Room ·A·	Room ·B·	Room ·C·	Room ·D·	Min.	Nom.	Max.	Min.	Nom.	Max.	Min.	Nom.	Max.	
4MXM68N2V1B 4MXM68N2V1B9	1.5+1.5+1.5+5.0	1,07	1,07	1,07	3,58	2,45	6,80	8,48	0,42	1,54	2,32	1,94	7,05	10,63	95
	1.5+1.5+1.5+6.0	0,97	0,97	0,97	3,89	2,48	6,80	8,38	0,40	1,52	2,08	1,81	6,96	9,53	95
	1.5+1.5+2.0+2.0	1,46	1,46	1,94	1,94	1,97	6,80	7,45	0,38	1,60	1,78	1,73	7,33	8,15	95
	1.5+1.5+2.0+2.5	1,36	1,36	1,81	2,27	1,97	6,80	7,62	0,36	1,58	1,87	1,64	7,24	8,55	95
	1.5+1.5+2.0+3.5	1,20	1,20	1,60	2,80	1,97	6,80	8,03	0,37	1,57	2,07	1,68	7,19	9,49	95
	1.5+1.5+2.0+4.2	1,11	1,11	1,48	3,10	1,97	6,80	8,19	0,37	1,56	2,16	1,68	7,14	9,90	95
	1.5+1.5+2.0+5.0	1,02	1,02	1,36	3,40	2,45	6,80	8,63	0,42	1,53	2,41	1,94	7,01	11,04	95
	1.5+1.5+2.0+6.0	0,93	0,93	1,24	3,71	2,48	6,80	8,56	0,40	1,51	2,18	1,81	6,92	9,98	95
	1.5+1.5+2.5+2.5	1,28	1,28	2,13	2,13	1,97	6,80	7,70	0,36	1,58	1,90	1,64	7,24	8,72	95
	1.5+1.5+2.5+3.5	1,13	1,13	1,89	2,64	2,32	6,80	8,11	0,46	1,56	2,12	2,11	7,14	9,69	95
	1.5+1.5+2.5+4.2	1,05	1,05	1,75	2,94	2,32	6,80	8,27	0,46	1,55	2,21	2,11	7,10	10,10	95
	1.5+1.5+2.5+5.0	0,97	0,97	1,62	3,24	2,45	6,80	8,70	0,42	1,52	2,46	1,94	6,96	11,24	95
	1.5+1.5+3.5+3.5	1,02	1,02	2,38	2,38	2,32	6,80	8,57	0,46	1,55	2,39	2,11	7,10	10,92	95
	1.5+1.5+3.5+4.2	0,95	0,95	2,22	2,67	2,44	6,80	8,65	0,50	1,54	2,44	2,27	7,05	11,16	95
	1.5+2.0+2.0+2.0	1,36	1,81	1,81	1,81	1,97	6,80	7,61	0,38	1,59	1,87	1,73	7,28	8,55	95
	1.5+2.0+2.0+2.5	1,28	1,70	1,70	2,13	1,97	6,80	7,78	0,36	1,58	1,95	1,64	7,24	8,92	95
	1.5+2.0+2.0+3.5	1,13	1,51	1,51	2,64	2,32	6,80	8,18	0,46	1,57	2,16	2,11	7,19	9,90	95
	1.5+2.0+2.0+4.2	1,05	1,40	1,40	2,94	2,32	6,80	8,34	0,46	1,56	2,25	2,11	7,14	10,31	95
	1.5+2.0+2.0+5.0	0,97	1,30	1,30	3,24	2,45	6,80	8,77	0,42	1,53	2,51	1,94	7,01	11,49	95
	1.5+2.0+2.5+2.5	1,20	1,60	2,00	2,00	1,97	6,80	7,86	0,36	1,58	1,99	1,64	7,24	9,12	95
	1.5+2.0+2.5+3.5	1,07	1,43	1,79	2,51	2,32	6,80	8,26	0,46	1,56	2,21	2,11	7,14	10,10	95
	1.5+2.0+2.5+4.2	1,00	1,33	1,67	2,80	2,32	6,80	8,43	0,46	1,55	2,30	2,11	7,10	10,51	95
	1.5+2.0+2.5+5.0	0,93	1,24	1,55	3,09	2,45	6,80	8,85	0,42	1,52	2,55	1,94	6,96	11,69	95
	1.5+2.0+3.5+3.5	0,97	1,30	2,27	2,27	1,98	6,80	8,64	0,37	1,55	2,44	1,68	7,10	11,16	95
	1.5+2.5+2.5+2.5	1,13	1,89	1,89	1,89	1,97	6,80	8,18	0,33	1,57	2,16	1,52	7,19	9,90	95
	1.5+2.5+2.5+3.5	1,02	1,70	1,70	2,38	2,32	6,80	8,49	0,40	1,55	2,34	1,81	7,10	10,71	95
	1.5+2.5+2.5+4.2	0,95	1,59	1,59	2,67	2,32	6,80	8,50	0,41	1,55	2,34	1,89	7,10	10,71	95
	1.5+2.5+3.5+3.5	0,93	1,55	2,16	2,16	2,32	6,80	8,71	0,40	1,54	2,48	1,81	7,05	11,36	95
	2.0+2.0+2.0+2.0	1,70	1,70	1,70	1,70	1,97	6,80	7,78	0,38	1,58	1,95	1,73	7,24	8,92	95
	2.0+2.0+2.0+2.5	1,60	1,60	1,60	2,00	1,97	6,80	7,95	0,36	1,58	2,04	1,64	7,24	9,33	95
	2.0+2.0+2.0+3.5	1,43	1,43	1,43	2,51	1,97	6,80	8,33	0,37	1,56	2,25	1,68	7,14	10,31	95
	2.0+2.0+2.0+4.2	1,33	1,33	1,33	2,80	1,97	6,80	8,49	0,37	1,55	2,34	1,68	7,10	10,71	95
	2.0+2.0+2.0+5.0	1,24	1,24	1,24	3,09	2,45	6,80	8,91	0,42	1,52	2,61	1,94	6,96	11,93	95
	2.0+2.0+2.5+2.5	1,51	1,51	1,89	1,89	1,97	6,80	8,10	0,37	1,57	2,12	1,68	7,19	9,69	95
	2.0+2.0+2.5+3.5	1,36	1,36	1,70	2,38	2,32	6,80	8,49	0,41	1,55	2,34	1,89	7,10	10,71	95
	2.0+2.0+2.5+4.2	1,27	1,27	1,59	2,67	2,32	6,80	8,64	0,41	1,55	2,44	1,89	7,10	11,16	95
	2.0+2.0+3.5+3.5	1,24	1,24	2,16	2,16	2,44	6,80	8,78	0,41	1,55	2,53	1,89	7,10	11,57	95
	2.0+2.5+2.5+2.5	1,43	1,79	1,79	1,79	1,97	6,80	8,33	0,37	1,56	2,25	1,68	7,14	10,31	95
	2.0+2.5+2.5+3.5	1,30	1,62	1,62	2,27	2,32	6,80	8,63	0,41	1,55	2,44	1,89	7,10	11,16	95
	2.5+2.5+2.5+2.5	1,70	1,70	1,70	1,70	2,32	6,80	8,56	0,42	1,55	2,39	1,94	7,10	10,92	95
	2.5+2.5+2.5+3.5	1,55	1,55	1,55	2,16	2,44	6,80	8,90	0,42	1,54	2,63	1,94	7,05	12,02	95

Notes

1. The total capacity of each connected indoor unit is up to ·11.0·kW.
2. The values above are for connecting with the following indoor unit types:
   ·1.5.2.0.2.5.3.5.4.2.5.0.6.0· kW class
   Wall-mounted ·CTXM-M, CTXM-N, CTXM-R, FTXM-M, FTXM-N, FTXM-R· series
3. Cooling capacity conditions
   Indoor temperature ·27·°C DB / ·19·°C WB
   Outdoor temperature ·35·°C DB
4. For additional information on the connection of the DHW generator for Multi and the Hybrid for Multi, see ·3D106169·.

3D105390A

4 Combination table

4 - 1 Combination Table

4MXM68N9

Heating ·(50Hz 230V)·

Outdoor unit	Indoor unit	Heating capacity [kW]				Total capacity [kW]			Power input [kW]			Total current [A]			Power factor [%]
		Room ·A·	Room ·B·	Room ·C·	Room ·D·	Minimum	Nominal	Maximum	Minimum	Nominal	Maximum	Minimum	Nominal	Maximum	
4MXM68M2V1B 4MXM68N2V1B 4MXM68N2V1B9	1,5	2,70	---	---	---	1,47	2,70	4,08	0,42	0,73	1,22	1,91	3,35	5,58	95
	2,0	2,72	---	---	---	1,48	2,72	4,09	0,43	0,74	1,28	1,95	3,39	5,86	95
	2,5	3,40	---	---	---	1,44	3,40	4,30	0,42	1,03	1,37	1,91	4,72	6,27	95
	3,5	4,30	---	---	---	1,45	4,30	4,90	0,40	1,42	1,75	1,82	6,50	8,01	95
	4,2	---	---	4,32	---	1,44	4,32	5,70	0,40	1,41	2,04	1,82	6,46	9,34	95
	5,0	---	---	5,60	---	1,66	5,60	6,90	0,39	1,84	2,59	1,78	8,43	11,85	95
	6,0	---	---	7,90	---	1,88	7,90	8,91	0,37	2,65	2,64	1,69	12,13	12,08	95
	1.5+1.5	2,65	2,65	---	---	1,65	5,30	7,38	0,36	1,19	1,83	1,63	5,45	8,38	95
	1.5+2.0	2,44	3,26	---	---	1,65	5,70	7,76	0,36	1,31	1,99	1,63	6,00	9,09	95
	1.5+2.5	2,29	3,81	---	---	1,65	6,10	7,95	0,36	1,43	2,06	1,63	6,55	9,43	95
	1.5+3.5	2,07	4,83	---	---	1,80	6,90	8,50	0,37	1,69	2,35	1,68	7,74	10,74	95
	1.5+4.2	1,97	---	5,53	---	1,80	7,50	8,85	0,37	1,90	2,57	1,68	8,70	11,75	95
	1.5+5.0	1,89	---	6,31	---	2,18	8,20	10,38	0,45	2,13	2,91	2,06	9,75	13,31	95
	1.5+6.0	1,72	---	6,88	---	2,46	8,60	10,58	0,48	2,28	2,67	2,19	10,44	12,21	95
	2.0+2.0	3,25	3,25	---	---	1,65	6,50	7,95	0,36	1,37	2,31	1,63	6,28	10,57	95
	2.0+2.5	3,07	3,83	---	---	1,65	6,90	8,12	0,36	1,52	2,32	1,63	6,96	10,62	95
	2.0+3.5	2,73	4,77	---	---	1,80	7,50	8,67	0,37	1,75	2,43	1,68	8,01	11,12	95
	2.0+4.2	2,58	---	5,42	---	1,80	8,00	9,03	0,37	1,98	2,66	1,68	9,07	12,17	95
	2.0+5.0	2,46	---	6,14	---	2,18	8,60	10,56	0,45	2,26	3,00	2,06	10,35	13,73	95
	2.0+6.0	2,15	---	6,45	---	2,46	8,60	10,75	0,48	2,24	2,74	2,19	10,26	12,55	95
	2.5+2.5	3,60	3,60	---	---	1,65	7,20	8,49	0,36	1,62	2,36	1,63	7,42	10,78	95
	2.5+3.5	3,29	4,61	---	---	1,89	7,90	9,03	0,38	1,91	2,66	1,72	8,75	12,17	95
	2.5+4.2	3,10	---	5,20	---	1,89	8,30	9,29	0,38	2,11	2,82	1,72	9,66	12,93	95
	2.5+5.0	2,87	---	5,73	---	2,27	8,60	10,68	0,46	2,24	3,09	2,11	10,26	14,15	95
	2.5+6.0	2,53	---	6,07	---	2,55	8,60	10,88	0,50	2,22	2,77	2,28	10,17	12,67	95
	3.5+3.5	4,30	4,30	---	---	2,17	8,60	9,38	0,42	2,26	2,86	1,94	10,35	13,09	95
	3.5+4.2	3,91	---	4,69	---	2,17	8,60	9,47	0,42	2,26	2,91	1,94	10,35	13,31	95
	3.5+5.0	3,54	---	5,06	---	2,56	8,60	10,90	0,51	2,22	3,13	2,32	10,17	14,32	95
	3.5+6.0	3,17	---	5,43	---	2,74	8,60	11,01	0,52	2,21	2,76	2,37	10,12	12,63	95
	4.2+4.2	---	---	4,30	4,30	2,17	8,60	9,56	0,42	2,22	2,94	1,94	10,17	13,47	95
	4.2+5.0	---	---	3,93	4,67	2,56	8,60	10,91	0,51	2,21	3,19	2,32	10,12	14,61	95
	4.2+6.0	---	---	3,54	5,06	2,74	8,60	11,02	0,51	2,20	2,79	2,32	10,07	12,76	95
	5.0+5.0	---	---	4,30	4,30	2,94	8,60	11,10	0,59	2,17	3,11	2,71	9,94	14,23	95
	5.0+6.0	---	---	3,91	4,69	3,14	8,60	11,10	0,60	2,15	2,72	2,75	9,84	12,46	95
	1.5+1.5+1.5	2,17	2,17	2,17	---	2,01	6,50	9,92	0,41	1,33	2,26	1,89	6,09	10,36	95
	1.5+1.5+2.0	2,07	2,07	2,76	---	2,01	6,90	10,10	0,41	1,46	2,34	1,89	6,69	10,69	95
	1.5+1.5+2.5	2,02	2,02	3,36	---	2,10	7,40	10,18	0,42	1,64	2,37	1,94	7,51	10,86	95
	1.5+1.5+3.5	1,89	1,89	4,42	---	2,31	8,20	10,29	0,44	1,87	2,49	2,02	8,56	11,41	95
	1.5+1.5+4.2	1,79	1,79	5,02	---	2,31	8,60	10,29	0,44	2,03	2,49	2,02	9,30	11,41	95
	1.5+1.5+5.0	1,61	1,61	5,38	---	2,71	8,60	10,46	0,55	2,01	2,57	2,50	9,20	11,75	95
	1.5+1.5+6.0	1,43	1,43	5,73	---	2,93	8,60	10,59	0,55	1,99	2,31	2,50	9,11	10,57	95
	1.5+2.0+2.0	2,35	3,13	3,13	---	2,01	8,60	10,26	0,41	2,05	2,41	1,89	9,39	11,03	95

Notes

. The total capacity of each connected indoor unit is up to ·11.0·kW.
. The values above are for connecting with the following indoor unit types:
·1.5, 2.0, 2.5, 3.5, 4.2, 5.0, 6.0· kW class
Wall-mounted ·CTXM-M, CTXM-N, CTXM-R, FTXM-M, FTXM-N, FTXM-R· series
. Heating capacity conditions
Indoor temperature ·20·°C DB
Outdoor temperature ·7·°C DB / ·6·°C WB

. For additional information on the connection of the DHW generator for Multi and the Hybrid for Multi, see ·3D106169·.

3D105391C

4 Combination table

4 - 1 Combination Table

4MXM68N9

4

Heating ·(50Hz 230V)·

Outdoor unit	Indoor unit	Heating capacity [kW]				Total capacity [kW]			Power input [kW]			Total current [A]			Power factor [%]
		Room ·A·	Room ·B·	Room ·C·	Room ·D·	Minimum	Nominal	Maximum	Minimum	Nominal	Maximum	Minimum	Nominal	Maximum	
4MXM68M2V1B 4MXM68N2V1B 4MXM68N2V1B9	1.5+2.0+2.5	2,15	2,87	3,58	---	2,10	8,60	10,36	0,42	2,04	2,44	1,94	9,34	11,16	95
	1.5+2.0+3.5	1,84	2,46	4,30	---	2,31	8,60	10,45	0,44	2,02	2,58	2,02	9,25	11,79	95
	1.5+2.0+4.2	1,68	2,23	4,69	---	2,31	8,60	10,46	0,44	2,01	2,57	2,02	9,20	11,75	95
	1.5+2.0+5.0	1,52	2,02	5,06	---	2,71	8,60	10,88	0,55	2,00	2,64	2,50	9,16	12,08	95
	1.5+2.0+6.0	1,36	1,81	5,43	---	2,93	8,60	10,89	0,55	1,98	2,38	2,50	9,07	10,91	95
	1.5+2.5+2.5	1,98	3,31	3,31	---	2,20	8,60	10,47	0,45	2,03	2,44	2,06	9,30	11,16	95
	1.5+2.5+3.5	1,72	2,87	4,01	---	2,40	8,60	10,58	0,47	2,02	2,57	2,15	9,25	11,75	95
	1.5+2.5+4.2	1,57	2,62	4,40	---	2,41	8,60	10,58	0,47	2,00	2,57	2,15	9,16	11,75	95
	1.5+2.5+5.0	1,43	2,39	4,78	---	2,81	8,60	11,00	0,56	1,99	2,64	2,58	9,11	12,08	95
	1.5+2.5+6.0	1,29	2,15	5,16	---	3,02	8,60	11,00	0,57	1,97	2,38	2,62	9,02	10,91	95
	1.5+3.5+3.5	1,52	3,54	3,54	---	2,69	8,60	10,59	0,55	1,99	2,57	2,50	9,11	11,75	95
	1.5+3.5+4.2	1,40	3,27	3,93	---	2,69	8,60	10,59	0,55	1,98	2,56	2,50	9,07	11,71	95
	1.5+3.5+5.0	1,29	3,01	4,30	---	3,00	8,60	10,93	0,62	1,97	2,59	2,84	9,02	11,87	95
	1.5+3.5+6.0	1,17	2,74	4,69	---	2,93	8,60	10,93	0,55	1,96	2,37	2,50	8,98	10,86	95
	1.5+4.2+4.2	1,30	---	3,65	3,65	2,69	8,60	10,68	0,55	1,98	2,59	2,50	9,07	11,87	95
	1.5+4.2+5.0	1,21	---	3,38	4,02	3,00	8,60	10,99	0,62	1,96	2,67	2,84	8,98	12,21	95
	2.0+2.0+2.0	2,60	2,60	2,60	---	2,01	7,80	10,44	0,41	1,72	2,48	1,89	7,88	11,37	95
	2.0+2.0+2.5	2,52	2,52	3,15	---	2,10	8,20	10,52	0,42	1,83	2,52	1,94	8,38	11,54	95
	2.0+2.0+3.5	2,29	2,29	4,01	---	2,31	8,60	10,63	0,44	2,04	2,65	2,02	9,34	12,13	95
	2.0+2.0+4.2	2,10	2,10	4,40	---	2,31	8,60	10,63	0,44	2,02	2,65	2,02	9,25	12,13	95
	2.0+2.0+5.0	1,91	1,91	4,78	---	2,71	8,60	10,82	0,55	2,00	2,72	2,50	9,16	12,46	95
	2.0+2.0+6.0	1,72	1,72	5,16	---	2,93	8,60	10,95	0,55	1,99	2,46	2,50	9,11	11,24	95
	2.0+2.5+2.5	2,46	3,07	3,07	---	2,20	8,60	10,54	0,43	1,97	2,61	1,98	9,02	11,96	95
	2.0+2.5+3.5	2,15	2,69	3,76	---	2,40	8,60	10,63	0,46	2,02	2,65	2,11	9,25	12,13	95
	2.0+2.5+4.2	1,98	2,47	4,15	---	2,41	8,60	10,64	0,46	2,01	2,64	2,11	9,20	12,08	95
	2.0+2.5+5.0	1,81	2,26	4,53	---	2,81	8,60	11,06	0,56	1,98	2,75	2,58	9,07	12,59	95
	2.0+2.5+6.0	1,64	2,05	4,91	---	3,02	8,60	11,07	0,56	1,98	2,43	2,58	9,07	11,12	95
	2.0+3.5+3.5	1,91	3,34	3,34	---	2,69	8,60	10,76	0,52	2,00	2,70	2,37	9,16	12,34	95
	2.0+3.5+4.2	1,77	3,10	3,72	---	2,69	8,60	10,76	0,52	1,99	2,69	2,37	9,11	12,29	95
	2.0+3.5+5.0	1,64	2,87	4,10	---	3,00	8,60	11,11	0,58	1,98	2,82	2,67	9,07	12,88	95
	2.0+4.2+4.2	1,65	---	3,47	3,47	2,69	8,60	10,77	0,52	1,97	2,69	2,37	9,02	12,29	95
	2.5+2.5+2.5	2,87	2,87	2,87	---	2,31	8,60	10,65	0,45	1,99	2,64	2,06	9,11	12,08	95
	2.5+2.5+3.5	2,53	2,53	3,54	---	2,50	8,60	10,87	0,48	1,99	2,72	2,19	9,11	12,46	95
	2.5+2.5+4.2	2,34	2,34	3,93	---	2,50	8,60	10,88	0,48	1,97	2,72	2,19	9,02	12,46	95
	2.5+2.5+5.0	2,15	2,15	4,30	---	2,91	8,60	11,07	0,58	1,96	2,78	2,67	8,98	12,72	95
	2.5+2.5+6.0	1,95	1,95	4,69	---	3,12	8,60	11,08	0,58	1,94	2,43	2,67	8,88	11,12	95
	2.5+3.5+3.5	2,26	3,17	3,17	---	2,78	8,60	11,00	0,53	1,96	2,72	2,41	8,98	12,46	95
	2.5+3.5+4.2	2,11	2,95	3,54	---	2,79	8,60	11,01	0,53	1,96	2,71	2,41	8,98	12,42	95
	2.5+3.5+5.0	1,95	2,74	3,91	---	3,19	8,60	11,08	0,60	1,90	2,74	2,75	8,70	12,55	95
	2.5+4.2+4.2	1,97	---	3,31	3,31	2,79	8,60	11,01	0,53	1,95	2,71	2,41	8,93	12,42	95
	3.5+3.5+3.5	2,87	2,87	2,87	---	2,98	8,60	11,06	0,57	1,94	2,79	2,62	8,88	12,76	95
	1.5+1.5+1.5+1.5	1,95	1,95	1,95	1,95	2,47	7,80	10,07	0,49	1,62	2,12	2,24	7,42	9,68	95

Notes

The total capacity of each connected indoor unit is up to ·11.0·kW.
The values above are for connecting with the following indoor unit types:
·1.5, 2.0, 2.5, 3.5, 4.2, 5.0, 6.0· kW class
Wall-mounted ·CTXM-M, CTXM-N, CTXM-R, FTXM-M, FTXM-N, FTXM-R· series
Heating capacity conditions
Indoor temperature ·20·°C DB
Outdoor temperature ·7·°C DB / ·6·°C WB

For additional information on the connection of the DHW generator for Multi and the Hybrid for Multi, see ·3D106169·.

3D105393C

4 Combination table

4 - 1 Combination Table

4MXM68N9

Heating ·(50Hz 230V)·

Outdoor unit	Indoor unit	Heating capacity [kW]				Total capacity [kW]			Power input [kW]			Total current [A]			Power factor [%]
		Room ·A·	Room ·B·	Room ·C·	Room ·D·	Minimum	Nominal	Maximum	Minimum	Nominal	Maximum	Minimum	Nominal	Maximum	
4MXM68M2V1B 4MXM68N2V1B 4MXM68N2V1B9	1.5+1.5+1.5+2.0	1,89	1,89	1,89	2,52	2,47	8,20	10,25	0,49	1,77	2,19	2,24	8,11	10,02	95
	1.5+1.5+1.5+2.5	1,84	1,84	1,84	3,07	2,57	8,60	10,36	0,50	1,88	2,20	2,28	8,61	10,07	95
	1.5+1.5+1.5+3.5	1,61	1,61	1,61	3,76	2,77	8,60	10,46	0,54	1,84	2,21	2,45	8,43	10,11	95
	1.5+1.5+1.5+4.2	1,48	1,48	1,48	4,15	2,78	8,60	10,46	0,53	1,84	2,20	2,41	8,43	10,06	95
	1.5+1.5+1.5+5.0	1,36	1,36	1,36	4,53	3,10	8,60	10,52	0,59	1,83	2,13	2,71	8,38	9,73	95
	1.5+1.5+1.5+6.0	1,23	1,23	1,23	4,91	3,04	8,60	10,88	0,45	1,79	1,98	2,06	8,20	9,05	95
	1.5+1.5+2.0+2.0	1,84	1,84	2,46	2,46	2,47	8,60	10,44	0,49	1,87	2,26	2,24	8,56	10,36	95
	1.5+1.5+2.0+2.5	1,72	1,72	2,29	2,87	2,57	8,60	10,54	0,50	1,87	2,27	2,28	8,56	10,39	95
	1.5+1.5+2.0+3.5	1,52	1,52	2,02	3,54	2,77	8,60	10,64	0,54	1,84	2,26	2,45	8,43	10,34	95
	1.5+1.5+2.0+4.2	1,40	1,40	1,87	3,93	2,78	8,60	10,65	0,53	1,82	2,25	2,41	8,33	10,30	95
	1.5+1.5+2.0+5.0	1,29	1,29	1,72	4,30	3,10	8,60	10,71	0,59	1,82	2,20	2,71	8,33	10,06	95
	1.5+1.5+2.0+6.0	1,17	1,17	1,56	4,69	3,04	8,60	11,07	0,45	1,78	2,04	2,06	8,15	9,35	95
	1.5+1.5+2.5+2.5	1,61	1,61	2,69	2,69	2,67	8,60	10,55	0,52	1,86	2,23	2,37	8,52	10,19	95
	1.5+1.5+2.5+3.5	1,43	1,43	2,39	3,34	2,98	8,60	10,65	0,59	1,82	2,27	2,71	8,33	10,40	95
	1.5+1.5+2.5+4.2	1,33	1,33	2,22	3,72	2,98	8,60	10,65	0,58	1,81	2,27	2,67	8,29	10,40	95
	1.5+1.5+2.5+5.0	1,23	1,23	2,05	4,10	3,10	8,60	10,90	0,59	1,80	2,25	2,71	8,24	10,30	95
	1.5+1.5+3.5+3.5	1,29	1,29	3,01	3,01	3,18	8,60	10,75	0,64	1,78	2,30	2,93	8,15	10,53	95
	1.5+1.5+3.5+4.2	1,21	1,21	2,81	3,38	2,99	8,60	10,85	0,58	1,78	2,34	2,67	8,15	10,69	95
	1.5+2.0+2.0+2.0	1,72	2,29	2,29	2,29	2,47	8,60	10,63	0,49	1,87	2,34	2,24	8,56	10,69	95
	1.5+2.0+2.0+2.5	1,61	2,15	2,15	2,69	2,57	8,60	10,72	0,50	1,86	2,35	2,28	8,52	10,76	95
	1.5+2.0+2.0+3.5	1,43	1,91	1,91	3,34	2,77	8,60	10,83	0,54	1,81	2,36	2,45	8,29	10,80	95
	1.5+2.0+2.0+4.2	1,33	1,77	1,77	3,72	2,78	8,60	10,84	0,53	1,80	2,35	2,41	8,24	10,74	95
	1.5+2.0+2.0+5.0	1,23	1,64	1,64	4,10	3,10	8,60	10,90	0,59	1,79	2,26	2,71	8,20	10,36	95
	1.5+2.0+2.5+2.5	1,52	2,02	2,53	2,53	2,67	8,60	10,72	0,52	1,86	2,29	2,37	8,52	10,48	95
	1.5+2.0+2.5+3.5	1,36	1,81	2,26	3,17	2,98	8,60	10,83	0,59	1,80	2,35	2,71	8,24	10,74	95
	1.5+2.0+2.5+4.2	1,26	1,69	2,11	3,54	2,98	8,60	10,84	0,58	1,80	2,35	2,67	8,24	10,74	95
	1.5+2.0+2.5+5.0	1,17	1,56	1,95	3,91	3,10	8,60	11,09	0,59	1,79	2,33	2,71	8,20	10,66	95
	1.5+2.0+3.5+3.5	1,23	1,64	2,87	2,87	3,18	8,60	10,93	0,64	1,78	2,37	2,93	8,15	10,86	95
	1.5+2.5+2.5+2.5	1,43	2,39	2,39	2,39	2,77	8,60	10,73	0,55	1,85	2,29	2,50	8,47	10,48	95
	1.5+2.5+2.5+3.5	1,29	2,15	2,15	3,01	3,08	8,60	10,92	0,62	1,79	2,38	2,84	8,20	10,91	95
	1.5+2.5+2.5+4.2	1,21	2,01	2,01	3,38	2,98	8,60	11,01	0,58	1,78	2,41	2,67	8,15	11,03	95
	1.5+2.5+3.5+3.5	1,17	1,95	2,74	2,74	3,18	8,60	11,02	0,64	1,76	2,41	2,93	8,06	11,03	95
	2.0+2.0+2.0+2.0	2,15	2,15	2,15	2,15	2,47	8,60	10,81	0,49	1,86	2,40	2,24	8,52	10,99	95
	2.0+2.0+2.0+2.5	2,02	2,02	2,02	2,53	2,57	8,60	10,90	0,50	1,86	2,41	2,28	8,52	11,03	95
	2.0+2.0+2.0+3.5	1,81	1,81	1,81	3,17	2,77	8,60	11,00	0,54	1,79	2,42	2,45	8,20	11,07	95
	2.0+2.0+2.0+4.2	1,69	1,69	1,69	3,54	2,78	8,60	11,01	0,53	1,80	2,42	2,41	8,24	11,07	95
	2.0+2.0+2.0+5.0	1,56	1,56	1,56	3,91	3,10	8,60	11,08	0,59	1,78	2,34	2,71	8,15	10,69	95
	2.0+2.0+2.5+2.5	1,91	1,91	2,39	2,39	2,67	8,60	10,91	0,52	1,85	2,36	2,37	8,47	10,82	95
	2.0+2.0+2.5+3.5	1,72	1,72	2,15	3,01	2,98	8,60	11,01	0,56	1,78	2,42	2,58	8,15	11,07	95
	2.0+2.0+2.5+4.2	1,61	1,61	2,01	3,38	2,98	8,60	11,01	0,56	1,78	2,42	2,58	8,15	11,07	95
	2.0+2.0+3.5+3.5	1,56	1,56	2,74	2,74	3,18	8,60	11,12	0,61	1,76	2,45	2,80	8,06	11,20	95
	2.0+2.5+2.5+2.5	1,81	2,26	2,26	2,26	2,77	8,60	10,91	0,54	1,84	2,36	2,45	8,43	10,82	95
	2.0+2.5+2.5+3.5	1,64	2,05	2,05	2,87	3,08	8,60	11,11	0,59	1,78	2,46	2,71	8,15	11,24	95
	2.5+2.5+2.5+2.5	2,15	2,15	2,15	2,15	2,88	8,60	11,10	0,54	1,84	2,38	2,45	8,43	10,91	95
	2.5+2.5+2.5+3.5	1,95	1,95	1,95	2,74	3,18	8,60	11,11	0,60	1,79	2,37	2,75	8,20	10,86	95

Notes

The total capacity of each connected indoor unit is up to ·11.0·kW.
The values above are for connecting with the following indoor unit types:
·1.5, 2.0, 2.5, 3.5, 4.2, 5.0, 6.0· kW class
Wall-mounted ·CTXM-M, CTXM-N, CTXM-R, FTXM-M, FTXM-N, FTXM-R· series
Heating capacity conditions
Indoor temperature ·20·°C DB
Outdoor temperature ·7·°C DB / ·6·°C WB

For additional information on the connection of the DHW generator for Multi and the Hybrid for Multi, see ·3D106169·.

3D105394C

4 Combination table

4 - 1 Combination Table

4MXM80N9

Cooling ·(50Hz 230V)·

Outdoor unit	Indoor unit	Cooling capacity [kW]				Total capacity [kW]			Power input [kW]			Total current [A]			Power factor [%]
		Room ·A·	Room ·B·	Room ·C·	Room ·D·	Min.	Nom.	Max.	Min.	Nom.	Max.	Min.	Nom.	Max.	
4MXM80N2V1B 4MXM80N2V1B9	1,5	1,80	---	---	---	1,73	1,80	2,89	0,42	0,52	1,00	1,91	2,38	4,57	95
	2,0	2,00	---	---	---	1,78	2,00	3,05	0,45	0,60	1,04	2,04	2,75	4,75	95
	2,5	2,50	---	---	---	1,85	2,50	3,59	0,48	0,78	1,31	2,18	3,57	5,99	95
	3,5	3,50	---	---	---	1,89	3,50	4,95	0,48	1,19	1,52	2,18	5,45	6,97	95
	4,2	---	4,20	---	---	1,94	4,20	5,02	0,49	1,43	1,53	2,22	6,55	7,01	95
	5,0	---	5,00	---	---	2,05	5,00	5,76	0,46	1,67	1,76	2,09	7,65	8,04	95
	6,0	---	6,00	---	---	2,15	6,00	6,73	0,46	2,01	2,36	2,09	9,20	10,79	95
	7,1	---	7,10	---	---	2,26	7,10	7,41	0,49	2,71	2,75	2,22	12,41	12,56	95
	1.5+1.5	1,50	1,50	---	---	1,87	3,00	4,11	0,42	0,47	0,97	1,94	2,16	4,44	95
	1.5+2.0	1,50	2,00	---	---	1,89	3,50	4,60	0,46	0,57	1,14	2,11	2,61	5,21	95
	1.5+2.5	1,50	2,50	---	---	1,95	4,00	5,07	0,42	0,69	1,23	1,94	3,16	5,62	95
	1.5+3.5	1,50	3,50	---	---	2,05	5,00	5,95	0,42	0,93	1,62	1,94	4,26	7,41	95
	1.5+4.2	1,50	4,20	---	---	2,12	5,70	6,51	0,46	1,14	1,87	2,11	5,22	8,55	95
	1.5+5.0	1,50	5,00	---	---	2,20	6,50	7,09	0,47	1,35	2,23	2,15	6,18	10,22	95
	1.5+6.0	1,48	5,92	---	---	2,32	7,40	7,74	0,51	1,64	2,38	2,32	7,51	10,88	95
	1.5+7.1	1,40	6,60	---	---	2,47	8,00	8,35	0,54	1,85	2,74	2,48	8,47	12,55	95
	2.0+2.0	2,00	2,00	---	---	1,95	4,00	5,41	0,46	0,68	1,49	2,11	3,12	6,80	95
	2.0+2.5	2,00	2,50	---	---	2,00	4,50	5,84	0,46	0,82	1,58	2,11	3,76	7,21	95
	2.0+3.5	2,00	3,50	---	---	2,10	5,50	6,44	0,46	1,06	2,17	2,11	4,86	9,94	95
	2.0+4.2	2,00	4,20	---	---	2,17	6,20	6,91	0,46	1,27	2,28	2,11	5,82	10,43	95
	2.0+5.0	2,00	5,00	---	---	2,25	7,00	7,45	0,47	1,47	2,46	2,15	6,73	11,24	95
	2.0+6.0	1,85	5,55	---	---	2,39	7,40	8,06	0,51	1,61	2,55	2,32	7,37	11,69	95
	2.0+7.1	1,76	6,24	---	---	2,53	8,00	8,62	0,54	1,76	2,93	2,48	8,06	13,40	95
	2.5+2.5	2,50	2,50	---	---	2,05	5,00	6,24	0,42	0,92	2,17	1,94	4,22	9,94	95
	2.5+3.5	2,50	3,50	---	---	2,15	6,00	6,73	0,46	1,24	2,12	2,11	5,68	9,69	95
	2.5+4.2	2,50	4,20	---	---	2,22	6,70	7,25	0,46	1,39	2,34	2,11	6,37	10,71	95
	2.5+5.0	2,47	4,93	---	---	2,32	7,40	7,74	0,50	1,61	2,63	2,27	7,37	12,06	95
	2.5+6.0	2,35	5,65	---	---	2,46	8,00	8,32	0,54	1,76	2,73	2,48	8,06	12,50	95
	2.5+7.1	2,08	5,92	---	---	2,60	8,00	8,83	0,54	1,79	3,05	2,48	8,20	13,97	95
	3.5+3.5	3,50	3,50	---	---	2,25	7,00	7,45	0,46	1,47	2,56	2,11	6,73	11,73	95
	3.5+4.2	3,50	4,20	---	---	2,35	7,70	7,88	0,50	1,69	2,74	2,27	7,74	12,55	95
	3.5+5.0	3,29	4,71	---	---	2,46	8,00	8,32	0,53	1,75	3,00	2,44	8,01	13,73	95
	3.5+6.0	2,95	5,05	---	---	2,58	8,00	8,79	0,54	1,73	3,66	2,48	7,92	16,74	95
	3.5+7.1	2,64	5,36	---	---	2,74	8,00	8,48	0,58	1,87	2,80	2,65	8,56	12,83	95
	4.2+4.2	---	4,00	4,00	---	2,44	8,00	8,27	0,53	1,81	3,04	2,44	8,29	13,93	95
	4.2+5.0	---	3,65	4,35	---	2,54	8,00	8,65	0,53	1,77	3,20	2,44	8,11	14,62	95
	4.2+6.0	---	3,29	4,71	---	2,68	8,00	9,07	0,58	1,82	3,26	2,65	8,33	14,91	95
	4.2+7.1	---	2,97	5,03	---	2,83	8,00	9,34	0,62	1,87	3,40	2,82	8,56	15,56	95
	5.0+5.0	---	4,00	4,00	---	2,65	8,00	8,83	0,57	1,74	3,22	2,61	7,97	14,75	95
	5.0+6.0	---	3,64	4,36	---	2,79	8,00	9,32	0,62	1,72	3,28	2,82	7,88	15,03	95

Notes

1. The total capacity of each connected indoor unit is up to ·14.5·kW.
2. The values above are for connecting with the following indoor unit types:

   ·1.5,2.0,2.5,3.5,4.2,5.0,6.0,7.1· kW class

   Wall-mounted ·FTXM-M, FTXM-N, FTXM-R· series
3. Cooling capacity conditions

   Indoor temperature ·27·°C DB / ·19·°C WB

   Outdoor temperature ·35·°C DB
4. For additional information on the connection of the DHW generator for Multi and the Hybrid for Multi, see ·3D106169·.

3D105399A

4 Combination table

4 - 1 Combination Table

4MXM80N9

Cooling ·(50Hz 230V)·

Outdoor unit	Indoor unit	Cooling capacity [kW]				Total capacity [kW]			Power input [kW]			Total current [A]			Power factor [%]
		Room ·A·	Room ·B·	Room ·C·	Room ·D·	Min.	Nom.	Max.	Min.	Nom.	Max.	Min.	Nom.	Max.	
4MXM80N2V1B 4MXM80N2V1B9	5.0+7.1	---	3,31	4,69	---	2,94	8,00	9,54	0,62	1,70	3,43	2,82	7,79	15,68	95
	6.0+6.0	---	4,36	3,64	---	2,93	8,00	9,58	0,62	1,71	3,20	2,82	7,83	14,66	95
	6.0+7.1	---	3,66	4,34	---	3,08	8,00	9,74	0,65	1,70	3,35	2,99	7,79	15,32	95
	7.1+7.1	---	4,00	4,00	---	3,23	8,00	9,79	0,69	1,70	3,36	3,16	7,79	15,36	95
	1.5+1.5+1.5	1,50	1,50	1,50	---	2,00	4,50	5,52	0,44	0,76	1,31	2,02	3,48	5,99	95
	1.5+1.5+2.0	1,50	1,50	2,00	---	2,05	5,00	5,95	0,48	0,87	1,49	2,19	3,99	6,80	95
	1.5+1.5+2.5	1,50	1,50	2,50	---	2,10	5,50	6,35	0,48	0,98	1,68	2,19	4,49	7,70	95
	1.5+1.5+3.5	1,50	1,50	3,50	---	2,20	6,50	7,09	0,48	1,24	2,04	2,19	5,68	9,33	95
	1.5+1.5+4.2	1,50	1,50	4,20	---	2,28	7,20	7,56	0,48	1,43	2,26	2,19	6,55	10,35	95
	1.5+1.5+5.0	1,39	1,39	4,63	---	2,39	7,40	8,04	0,52	1,53	2,45	2,36	7,01	11,20	95
	1.5+1.5+6.0	1,33	1,33	5,33	---	2,52	8,00	8,55	0,55	1,73	2,54	2,53	7,92	11,61	95
	1.5+1.5+7.1	1,19	1,19	5,62	---	2,67	8,00	9,02	0,59	1,81	2,79	2,69	8,29	12,79	95
	1.5+2.0+2.0	1,50	2,00	2,00	---	2,10	5,50	6,35	0,48	0,98	1,68	2,19	4,49	7,70	95
	1.5+2.0+2.5	1,50	2,00	2,50	---	2,15	6,00	6,73	0,48	1,10	1,83	2,19	5,04	8,39	95
	1.5+2.0+3.5	1,50	2,00	3,50	---	2,25	7,00	7,43	0,48	1,36	2,21	2,19	6,23	10,10	95
	1.5+2.0+4.2	1,50	2,00	4,20	---	2,35	7,70	7,86	0,51	1,62	2,44	2,32	7,42	11,16	95
	1.5+2.0+5.0	1,41	1,88	4,71	---	2,46	8,00	8,30	0,54	1,72	2,63	2,48	7,88	12,02	95
	1.5+2.0+6.0	1,26	1,68	5,05	---	2,58	8,00	8,77	0,55	1,71	2,67	2,53	7,83	12,22	95
	1.5+2.0+7.1	1,13	1,51	5,36	---	2,74	8,00	9,19	0,59	1,85	2,93	2,69	8,47	13,40	95
	1.5+2.5+2.5	1,50	2,50	2,50	---	2,20	6,50	7,09	0,48	1,24	2,04	2,19	5,68	9,33	95
	1.5+2.5+3.5	1,48	2,47	3,45	---	2,32	7,40	7,74	0,51	1,51	2,38	2,32	6,92	10,88	95
	1.5+2.5+4.2	1,46	2,44	4,10	---	2,42	8,00	8,15	0,51	1,75	2,62	2,32	8,01	11,98	95
	1.5+2.5+5.0	1,33	2,22	4,44	---	2,52	8,00	8,55	0,54	1,72	2,76	2,48	7,88	12,63	95
	1.5+2.5+6.0	1,20	2,00	4,80	---	2,65	8,00	8,98	0,55	1,81	2,79	2,53	8,29	12,79	95
	1.5+2.5+7.1	1,08	1,80	5,12	---	2,80	8,00	9,34	0,59	1,85	3,00	2,69	8,47	13,73	95
	1.5+3.5+3.5	1,41	3,29	3,29	---	2,46	8,00	8,30	0,54	1,76	2,74	2,48	8,06	12,55	95
	1.5+3.5+4.2	1,30	3,04	3,65	---	2,54	8,00	8,64	0,54	1,75	2,93	2,48	8,01	13,40	95
	1.5+3.5+5.0	1,20	2,80	4,00	---	2,65	8,00	8,98	0,58	1,81	3,08	2,65	8,29	14,09	95
	1.5+3.5+6.0	1,09	2,55	4,36	---	2,79	8,00	9,31	0,59	1,85	3,00	2,69	8,47	13,73	95
	1.5+3.5+7.1	0,99	2,31	4,69	---	2,94	8,00	9,58	0,62	1,83	3,21	2,82	8,38	14,70	95
	1.5+4.2+4.2	1,21	3,39	3,39	---	2,64	8,00	8,94	0,58	1,74	3,12	2,65	7,97	14,30	95
	1.5+4.2+5.0	1,12	3,14	3,74	---	2,75	8,00	9,22	0,58	1,71	3,21	2,65	7,83	14,70	95
	1.5+4.2+6.0	1,03	2,87	4,10	---	2,89	8,00	9,49	0,62	1,69	3,14	2,82	7,74	14,38	95
	1.5+4.2+7.1	0,94	2,63	4,44	---	3,04	8,00	9,69	0,65	1,67	3,28	2,99	7,65	15,03	95
	1.5+5.0+5.0	1,04	3,48	3,48	---	2,86	8,00	9,45	0,62	1,61	3,31	2,82	7,37	15,15	95
	1.5+5.0+6.0	0,96	3,20	3,84	---	3,00	8,00	9,64	0,63	1,60	3,16	2,86	7,33	14,46	95
	1.5+5.0+7.1	0,88	2,94	4,18	---	3,15	8,00	9,76	0,65	1,59	3,23	2,99	7,28	14,79	95
	1.5+6.0+6.0	0,89	3,56	3,56	---	3,13	8,00	9,75	0,66	1,60	2,93	3,03	7,33	13,40	95
	2.0+2.0+2.0	2,00	2,00	2,00	---	2,15	6,00	6,76	0,48	1,10	1,89	2,19	5,04	8,64	95
	2.0+2.0+2.5	2,00	2,00	2,50	---	2,20	6,50	7,09	0,48	1,24	2,04	2,19	5,68	9,33	95

Notes

1. The total capacity of each connected indoor unit is up to ·14.5·kW.
2. The values above are for connecting with the following indoor unit types:
   ·1.5,2.0,2.5,3.5,4.2,5.0,6.0,7.1· kW class
   Wall-mounted ·FTXM-M, FTXM-N, FTXM-R· series
3. Cooling capacity conditions
   Indoor temperature ·27·°C DB / ·19·°C WB
   – Outdoor temperature ·35·°C DB
4. For additional information on the connection of the DHW generator for Multi and the Hybrid for Multi, see ·3D106169·.

3D105400A

4 Combination table

4 - 1 Combination Table

4

4MXM80N9

Cooling ·(50Hz 230V)·

Outdoor unit	Indoor unit	Cooling capacity [kW]				Total capacity [kW]			Power input [kW]			Total current [A]			Power factor [%]
		Room ·A·	Room ·B·	Room ·C·	Room ·D·	Min.	Nom.	Max.	Min.	Nom.	Max.	Min.	Nom.	Max.	
4MXM80N2V1B 4MXM80N2V1B9	2.0+2.0+3.5	1,97	1,97	3,45	---	2,32	7,40	7,76	0,51	1,51	2,38	2,32	6,92	10,88	95
	2.0+2.0+4.2	1,95	1,95	4,10	---	2,42	8,00	8,17	0,51	1,75	2,55	2,32	8,01	11,69	95
	2.0+2.0+5.0	1,78	1,78	4,44	---	2,52	8,00	8,57	0,54	1,72	2,82	2,48	7,88	12,91	95
	2.0+2.0+6.0	1,60	1,60	4,80	---	2,65	8,00	9,00	0,55	1,81	2,79	2,53	8,29	12,79	95
	2.0+2.0+7.1	1,44	1,44	5,12	---	2,80	8,00	9,36	0,59	1,83	3,07	2,69	8,38	14,05	95
	2.0+2.5+2.5	2,00	2,50	2,50	---	2,25	7,00	7,45	0,48	1,36	2,21	2,19	6,23	10,10	95
	2.0+2.5+3.5	1,85	2,31	3,24	---	2,39	7,40	8,06	0,51	1,50	2,55	2,32	6,87	11,69	95
	2.0+2.5+4.2	1,84	2,30	3,86	---	2,48	8,00	8,43	0,54	1,75	2,68	2,48	8,01	12,26	95
	2.0+2.5+5.0	1,68	2,11	4,21	---	2,58	8,00	8,79	0,54	1,72	2,95	2,48	7,88	13,48	95
	2.0+2.5+6.0	1,52	1,90	4,57	---	2,72	8,00	9,17	0,59	1,84	2,93	2,69	8,43	13,40	95
	2.0+2.5+7.1	1,38	1,72	4,90	---	2,87	8,00	9,49	0,62	1,83	3,14	2,82	8,38	14,38	95
	2.0+3.5+3.5	1,78	3,11	3,11	---	2,52	8,00	8,57	0,54	1,74	2,87	2,48	7,97	13,12	95
	2.0+3.5+4.2	1,65	2,89	3,46	---	2,61	8,00	8,87	0,58	1,79	3,00	2,65	8,20	13,73	95
	2.0+3.5+5.0	1,52	2,67	3,81	---	2,72	8,00	9,17	0,58	1,83	3,21	2,65	8,38	14,70	95
	2.0+3.5+6.0	1,39	2,43	4,17	---	2,86	8,00	9,47	0,62	1,83	3,13	2,82	8,38	14,34	95
	2.0+3.5+7.1	1,27	2,22	4,51	---	3,01	8,00	9,28	0,62	1,81	2,94	2,82	8,29	13,44	95
	2.0+4.2+4.2	1,54	3,23	3,23	---	2,71	8,00	9,17	0,58	1,80	3,26	2,65	8,24	14,91	95
	2.0+4.2+5.0	1,43	3,00	3,57	---	2,82	8,00	9,41	0,62	1,84	3,36	2,82	8,43	15,36	95
	2.0+4.2+6.0	1,31	2,75	3,93	---	2,95	8,00	9,64	0,62	1,81	3,20	2,82	8,29	14,66	95
	2.0+4.2+7.1	1,20	2,53	4,27	---	3,11	8,00	9,79	0,65	1,79	3,28	2,99	8,20	15,03	95
	2.0+5.0+5.0	1,33	3,33	3,33	---	2,93	8,00	9,58	0,62	1,74	3,38	2,82	7,97	15,48	95
	2.0+5.0+6.0	1,23	3,08	3,69	---	3,06	8,00	9,73	0,65	1,72	3,23	2,99	7,88	14,79	95
	2.0+5.0+7.1	1,13	2,84	4,03	---	3,22	8,00	9,79	0,65	1,70	3,23	2,99	7,79	14,79	95
	2.0+6.0+6.0	1,14	3,43	3,43	---	3,20	8,00	9,79	0,66	1,71	3,00	3,03	7,83	13,73	95
	2.5+2.5+2.5	2,47	2,47	2,47	---	2,32	7,40	7,76	0,51	1,50	2,38	2,32	6,87	10,88	95
	2.5+2.5+3.5	2,35	2,35	3,29	---	2,46	8,00	8,32	0,54	1,74	2,74	2,48	7,97	12,55	95
	2.5+2.5+4.2	2,17	2,17	3,65	---	2,54	8,00	8,66	0,54	1,73	2,93	2,48	7,92	13,40	95
	2.5+2.5+5.0	2,00	2,00	4,00	---	2,65	8,00	9,00	0,58	1,81	3,08	2,65	8,29	14,09	95
	2.5+2.5+6.0	1,82	1,82	4,36	---	2,79	8,00	9,33	0,59	1,83	3,07	2,69	8,38	14,05	95
	2.5+2.5+7.1	1,65	1,65	4,69	---	2,94	8,00	9,60	0,62	1,81	3,21	2,82	8,29	14,70	95
	2.5+3.5+3.5	2,11	2,95	2,95	---	2,58	8,00	8,51	0,54	1,73	2,68	2,48	7,92	12,26	95
	2.5+3.5+4.2	1,96	2,75	3,29	---	2,68	8,00	9,07	0,58	1,81	3,06	2,65	8,29	14,01	95
	2.5+3.5+5.0	1,82	2,55	3,64	---	2,79	8,00	9,33	0,62	1,81	3,28	2,82	8,29	15,03	95
	2.5+3.5+6.0	1,67	2,33	4,00	---	2,93	8,00	9,58	0,62	1,79	3,20	2,82	8,20	14,66	95
	2.5+3.5+7.1	1,53	2,14	4,34	---	3,08	8,00	9,28	0,65	1,77	2,94	2,99	8,11	13,44	95
	2.5+4.2+4.2	1,83	3,08	3,08	---	2,78	8,00	9,20	0,62	1,87	3,27	2,82	8,56	14,95	95
	2.5+4.2+5.0	1,71	2,87	3,42	---	2,89	8,00	9,54	0,62	1,82	3,43	2,82	8,33	15,68	95
	2.5+4.2+6.0	1,57	2,65	3,78	---	3,02	8,00	9,72	0,62	1,80	3,28	2,82	8,24	14,99	95
	2.5+4.2+7.1	1,45	2,43	4,12	---	3,17	8,00	9,82	0,65	1,78	3,36	2,99	8,15	15,36	95
	2.5+5.0+5.0	1,60	3,20	3,20	---	3,00	8,00	9,66	0,65	1,73	3,45	2,99	7,92	15,80	95

–

Notes

1.The total capacity of each connected indoor unit is up to ·14.5·kW.

2. The values above are for connecting with the following indoor unit types:
   ·2.0,2.5,3.5,4.2,5.0,6.0,7.1· kW class
   Wall-mounted ·FTXM-M, FTXM-N, FTXM-R· series

3.Cooling capacity conditions
   Indoor temperature ·27·°C DB / ·19·°C WB
   Outdoor temperature ·35·°C DB

4. For additional information on the connection of the DHW generator for Multi and the Hybrid for Multi, see ·3D106169·.

3D105401A

4 Combination table

4 - 1 Combination Table

4MXM80N9

Cooling ·(50Hz 230V)·

Outdoor unit	Indoor unit	Cooling capacity [kW]				Total capacity [kW]			Power input [kW]			Total current [A]			Power factor [%]
		Room ·A·	Room ·B·	Room ·C·	Room ·D·	Min.	Nom.	Max.	Min.	Nom.	Max.	Min.	Nom.	Max.	
4MXM80N2V1B 4MXM80N2V1B9	2.5+5.0+6.0	1,48	2,96	3,56	---	3,13	8,00	9,77	0,65	1,71	3,23	2,99	7,83	14,79	95
	2.5+6.0+6.0	1,38	3,31	3,31	---	3,27	8,00	9,79	0,66	1,70	3,00	3,03	7,79	13,73	95
	3.5+3.5+3.5	2,67	2,67	2,67	---	2,72	8,00	8,84	0,58	1,79	2,80	2,65	8,20	12,83	95
	3.5+3.5+4.2	2,50	2,50	3,00	---	2,82	8,00	9,48	0,62	1,86	3,26	2,82	8,52	14,91	95
	3.5+3.5+5.0	2,33	2,33	3,33	---	2,93	8,00	9,54	0,62	1,81	3,43	2,82	8,29	15,68	95
	3.5+3.5+6.0	2,15	2,15	3,69	---	3,06	8,00	9,29	0,65	1,79	3,00	2,99	8,20	13,73	95
	3.5+3.5+7.1	1,99	1,99	4,03	---	3,22	8,00	9,79	0,69	1,77	3,36	3,16	8,11	15,36	95
	3.5+4.2+4.2	2,35	2,82	2,82	---	2,91	8,00	9,36	0,62	1,85	3,40	2,82	8,47	15,56	95
	3.5+4.2+5.0	2,20	2,65	3,15	---	3,02	8,00	9,55	0,65	1,81	3,43	2,99	8,29	15,68	95
	3.5+4.2+6.0	2,04	2,45	3,50	---	3,16	8,00	9,78	0,65	1,79	3,36	2,99	8,20	15,36	95
	3.5+5.0+5.0	2,07	2,96	2,96	---	3,13	8,00	9,74	0,65	1,71	3,45	2,99	7,83	15,80	95
	3.5+5.0+6.0	1,93	2,76	3,31	---	3,27	8,00	9,79	0,69	1,70	3,23	3,16	7,79	14,79	95
	4.2+4.2+4.2	---	2,67	2,67	2,67	3,01	8,00	9,37	0,65	1,84	3,40	2,99	8,43	15,56	95
	4.2+4.2+5.0	---	2,51	2,51	2,99	3,12	8,00	9,56	0,65	1,80	3,43	2,99	8,24	15,68	95
	4.2+4.2+6.0	---	2,33	2,33	3,33	3,26	8,00	9,79	0,69	1,78	3,36	3,16	8,15	15,36	95
	4.2+5.0+5.0	---	2,37	2,82	2,82	3,23	8,00	9,75	0,69	1,79	3,45	3,16	8,20	15,80	95
	1.5+1.5+1.5+1.5	1,50	1,50	1,50	1,50	2,15	6,00	6,73	0,49	1,08	1,54	2,23	4,95	7,05	95
	1.5+1.5+1.5+2.0	1,50	1,50	1,50	2,00	2,20	6,50	7,09	0,49	1,21	1,69	2,23	5,54	7,74	95
	1.5+1.5+1.5+2.5	1,50	1,50	1,50	2,50	2,25	7,00	7,43	0,49	1,34	1,84	2,23	6,14	8,43	95
	1.5+1.5+1.5+3.5	1,39	1,39	1,39	3,24	2,39	7,40	8,04	0,52	1,62	2,12	2,36	7,42	9,69	95
	1.5+1.5+1.5+4.2	1,38	1,38	1,38	3,86	2,48	8,00	8,40	0,52	1,99	2,30	2,36	9,11	10,51	95
	1.5+1.5+1.5+5.0	1,26	1,26	1,26	4,21	2,58	8,00	8,77	0,55	1,95	2,55	2,53	8,93	11,69	95
	1.5+1.5+1.5+6.0	1,14	1,14	1,14	4,57	2,72	8,00	9,15	0,56	2,21	2,59	2,57	10,12	11,85	95
	1.5+1.5+1.5+7.1	1,03	1,03	1,03	4,90	2,87	8,00	9,47	0,59	2,18	2,72	2,69	9,98	12,46	95
	1.5+1.5+2.0+2.0	1,50	1,50	2,00	2,00	2,25	7,00	7,43	0,49	1,34	1,84	2,23	6,14	8,43	95
	1.5+1.5+2.0+2.5	1,48	1,48	1,97	2,47	2,32	7,40	7,74	0,52	1,62	1,96	2,36	7,42	8,96	95
	1.5+1.5+2.0+3.5	1,41	1,41	1,88	3,29	2,46	8,00	8,30	0,52	1,99	2,23	2,36	9,11	10,22	95
	1.5+1.5+2.0+4.2	1,30	1,30	1,74	3,65	2,54	8,00	8,64	0,55	1,98	2,42	2,53	9,07	11,08	95
	1.5+1.5+2.0+5.0	1,20	1,20	1,60	4,00	2,65	8,00	8,98	0,55	2,15	2,68	2,53	9,84	12,26	95
	1.5+1.5+2.0+6.0	1,09	1,09	1,45	4,36	2,79	8,00	9,31	0,59	2,18	2,65	2,69	9,98	12,14	95
	1.5+1.5+2.0+7.1	0,99	0,99	1,32	4,69	2,94	8,00	9,58	0,63	2,15	2,79	2,86	9,84	12,79	95
	1.5+1.5+2.5+2.5	1,39	1,39	2,31	2,31	2,39	7,40	8,04	0,52	1,62	2,12	2,36	7,42	9,69	95
	1.5+1.5+2.5+3.5	1,33	1,33	2,22	3,11	2,52	8,00	8,55	0,55	1,98	2,55	2,53	9,07	11,65	95
	1.5+1.5+2.5+4.2	1,24	1,24	2,06	3,46	2,61	8,00	8,85	0,55	2,18	2,73	2,53	9,98	12,50	95
	1.5+1.5+2.5+5.0	1,14	1,14	1,90	3,81	2,72	8,00	9,15	0,59	2,20	2,81	2,69	10,07	12,87	95
	1.5+1.5+2.5+6.0	1,04	1,04	1,74	4,17	2,86	8,00	9,45	0,59	2,22	2,72	2,69	10,17	12,46	95
	1.5+1.5+2.5+7.1	0,95	0,95	1,59	4,51	3,01	8,00	9,66	0,63	2,19	2,86	2,86	10,03	13,08	95
	1.5+1.5+3.5+3.5	1,20	1,20	2,80	2,80	2,65	8,00	8,98	0,55	2,18	2,80	2,53	9,98	12,83	95
	1.5+1.5+3.5+4.2	1,12	1,12	2,62	3,14	2,75	8,00	9,22	0,59	2,26	2,94	2,69	10,35	13,44	95
	1.5+1.5+3.5+5.0	1,04	1,04	2,43	3,48	2,86	8,00	9,45	0,59	2,20	3,02	2,69	10,07	13,81	95

Notes

1. The total capacity of each connected indoor unit is up to ·14.5·kW.
2. The values above are for connecting with the following indoor unit types:
   ·1.5,2.0,2.5,3.5,4.2,5.0,6.0,7.1· kW class
   Wall-mounted ·FTXM-M, FTXM-N, FTXM-R· series
3. Cooling capacity conditions
   Indoor temperature ·27·°C DB / ·19·°C WB
   Outdoor temperature ·35·°C DB
4. For additional information on the connection of the DHW generator for Multi and the Hybrid for Multi, see ·3D106169·.

3D105402A

4 Combination table

4 - 1 Combination Table

4MXM80N9

Cooling ·(50Hz 230V)·

Outdoor unit	Indoor unit	Cooling capacity [kW]				Total capacity [kW]			Power input [kW]			Total current [A]			Power factor [%]
		Room ·A·	Room ·B·	Room ·C·	Room ·D·	Min.	Nom.	Max.	Min.	Nom.	Max.	Min.	Nom.	Max.	
4MXM80N2V1B 4MXM80N2V1B9	1.5+1.5+3.5+6.0	0,96	0,96	2,24	3,84	3,00	8,00	9,64	0,63	2,17	2,86	2,86	9,94	13,08	95
	1.5+1.5+3.5+7.1	0,88	0,88	2,06	4,18	3,15	8,00	9,76	0,66	2,14	2,93	3,03	9,80	13,40	95
	1.5+1.5+4.2+4.2	1,05	1,05	2,95	2,95	2,84	8,00	9,41	0,59	2,25	3,07	2,69	10,30	14,05	95
	1.5+1.5+4.2+5.0	0,98	0,98	2,75	3,28	2,95	8,00	9,59	0,63	2,18	3,09	2,86	9,98	14,13	95
	1.5+1.5+4.2+6.0	0,91	0,91	2,55	3,64	3,09	8,00	9,73	0,63	2,15	2,93	2,86	9,84	13,40	95
	1.5+1.5+4.2+7.1	0,84	0,84	2,35	3,97	3,24	8,00	9,77	0,66	2,13	2,93	3,03	9,75	13,40	95
	1.5+1.5+5.0+5.0	0,92	0,92	3,08	3,08	3,06	8,00	9,71	0,63	2,05	3,04	2,86	9,39	13,93	95
	1.5+1.5+5.0+6.0	0,86	0,86	2,86	3,43	3,20	8,00	9,77	0,66	2,02	2,87	3,03	9,25	13,16	95
	1.5+2.0+2.0+2.0	1,48	1,97	1,97	1,97	2,32	7,40	7,74	0,52	1,62	1,96	2,36	7,42	8,96	95
	1.5+2.0+2.0+2.5	1,39	1,85	1,85	2,31	2,39	7,40	8,04	0,52	1,62	2,12	2,36	7,42	9,69	95
	1.5+2.0+2.0+3.5	1,33	1,78	1,78	3,11	2,52	8,00	8,55	0,55	1,98	2,36	2,53	9,07	10,79	95
	1.5+2.0+2.0+4.2	1,24	1,65	1,65	3,46	2,61	8,00	8,85	0,55	2,18	2,55	2,53	9,98	11,65	95
	1.5+2.0+2.0+5.0	1,14	1,52	1,52	3,81	2,72	8,00	9,15	0,59	2,21	2,81	2,69	10,12	12,87	95
	1.5+2.0+2.0+6.0	1,04	1,39	1,39	4,17	2,86	8,00	9,45	0,59	2,22	2,72	2,69	10,17	12,46	95
	1.5+2.0+2.0+7.1	0,95	1,27	1,27	4,51	3,01	8,00	9,66	0,63	2,19	2,86	2,86	10,03	13,08	95
	1.5+2.0+2.5+2.5	1,41	1,88	2,35	2,35	2,46	8,00	8,30	0,52	2,00	2,23	2,36	9,16	10,22	95
	1.5+2.0+2.5+3.5	1,26	1,68	2,11	2,95	2,58	8,00	8,77	0,55	1,98	2,67	2,53	9,07	12,22	95
	1.5+2.0+2.5+4.2	1,18	1,57	1,96	3,29	2,68	8,00	9,05	0,59	2,17	2,87	2,69	9,94	13,12	95
	1.5+2.0+2.5+5.0	1,09	1,45	1,82	3,64	2,79	8,00	9,31	0,59	2,23	2,88	2,69	10,21	13,20	95
	1.5+2.0+2.5+6.0	1,00	1,33	1,67	4,00	2,93	8,00	9,56	0,63	2,20	2,79	2,86	10,07	12,75	95
	1.5+2.0+2.5+7.1	0,92	1,22	1,53	4,34	3,08	8,00	9,72	0,63	2,17	2,93	2,86	9,94	13,40	95
	1.5+2.0+3.5+3.5	1,14	1,52	2,67	2,67	2,72	8,00	9,15	0,59	2,21	2,94	2,69	10,12	13,44	95
	1.5+2.0+3.5+4.2	1,07	1,43	2,50	3,00	2,82	8,00	9,36	0,59	2,25	3,07	2,69	10,30	14,05	95
	1.5+2.0+3.5+5.0	1,00	1,33	2,33	3,33	2,93	8,00	9,56	0,63	2,18	3,09	2,86	9,98	14,13	95
	1.5+2.0+3.5+6.0	0,92	1,23	2,15	3,69	3,06	8,00	9,71	0,63	2,15	2,93	2,86	9,84	13,40	95
	1.5+2.0+3.5+7.1	0,85	1,13	1,99	4,03	3,22	8,00	9,77	0,66	2,13	2,93	3,03	9,75	13,40	95
	1.5+2.0+4.2+4.2	1,01	1,34	2,82	2,82	2,91	8,00	9,54	0,62	2,23	3,14	2,82	10,21	14,38	95
	1.5+2.0+4.2+5.0	0,94	1,26	2,65	3,15	3,02	8,00	9,67	0,63	2,17	3,16	2,86	9,94	14,46	95
	1.5+2.0+4.2+6.0	0,88	1,17	2,45	3,50	3,16	8,00	9,76	0,66	2,14	2,93	3,03	9,80	13,40	95
	1.5+2.0+5.0+5.0	0,89	1,19	2,96	2,96	3,13	8,00	9,75	0,65	2,06	3,12	2,99	9,43	14,26	95
	1.5+2.0+5.0+6.0	0,83	1,10	2,76	3,31	3,27	8,00	9,77	0,66	2,03	2,87	3,03	9,30	13,16	95
	1.5+2.5+2.5+2.5	1,33	2,22	2,22	2,22	2,52	8,00	8,55	0,55	1,98	2,36	2,53	9,07	10,79	95
	1.5+2.5+2.5+3.5	1,20	2,00	2,00	2,80	2,65	8,00	8,98	0,55	2,17	2,79	2,53	9,94	12,79	95
	1.5+2.5+2.5+4.2	1,12	1,87	1,87	3,14	2,75	8,00	9,22	0,59	2,23	2,94	2,69	10,21	13,44	95
	1.5+2.5+2.5+5.0	1,04	1,74	1,74	3,48	2,86	8,00	9,45	0,59	2,17	3,02	2,69	9,94	13,81	95
	1.5+2.5+2.5+6.0	0,96	1,60	1,60	3,84	3,00	8,00	9,64	0,63	2,14	2,86	2,86	9,80	13,08	95
	1.5+2.5+2.5+7.1	0,88	1,47	1,47	4,18	3,15	8,00	9,76	0,66	2,12	2,93	3,03	9,71	13,40	95
	1.5+2.5+3.5+3.5	1,09	1,82	2,55	2,55	2,79	8,00	9,31	0,59	2,15	3,00	2,69	9,84	13,73	95
	1.5+2.5+3.5+4.2	1,03	1,71	2,39	2,87	2,89	8,00	9,49	0,62	2,14	3,14	2,82	9,80	14,38	95
	1.5+2.5+3.5+5.0	0,96	1,60	2,24	3,20	3,00	8,00	9,64	0,63	2,09	3,09	2,86	9,57	14,13	95

Notes

1.The total capacity of each connected indoor unit is up to ·14.5·kW.

2.The values above are for connecting with the following indoor unit types:
·1.5,2.0,2.5,3.5,4.2,5.0,6.0,7.1· kW class
Wall-mounted ·FTXM-M, FTXM-N, FTXM-R· series

3. Cooling capacity conditions
Indoor temperature ·27·°C DB / ·19·°C WB
Outdoor temperature ·35·°C DB

4. For additional information on the connection of the DHW generator for Multi and the Hybrid for Multi, see ·3D106169·.

3D105403A

4 Combination table

4 - 1 Combination Table

4MXM80N9

Cooling ·(50Hz 230V)·

Outdoor unit	Indoor unit	Cooling capacity [kW]				Total capacity [kW]			Power input [kW]			Total current [A]			Power factor [%]
		Room ·A·	Room ·B·	Room ·C·	Room ·D·	Min.	Nom.	Max.	Min.	Nom.	Max.	Min.	Nom.	Max.	
4MXM80N2V1B 4MXM80N2V1B9	1.5+2.5+3.5+6.0	0,89	1,48	2,07	3,56	3,13	8,00	9,75	0,66	2,06	2,93	3,03	9,43	13,40	95
	1.5+2.5+4.2+4.2	0,97	1,61	2,71	2,71	2,98	8,00	9,63	0,62	2,13	3,21	2,82	9,75	14,70	95
	1.5+2.5+4.2+5.0	0,91	1,52	2,55	3,03	3,09	8,00	9,73	0,65	2,08	3,16	2,99	9,52	14,46	95
	1.5+2.5+4.2+6.0	0,85	1,41	2,37	3,38	3,23	8,00	9,77	0,66	2,05	2,93	3,03	9,39	13,40	95
	1.5+2.5+5.0+5.0	0,86	1,43	2,86	2,86	3,20	8,00	9,77	0,65	2,07	3,12	2,99	9,48	14,26	95
	1.5+3.5+3.5+3.5	1,00	2,33	2,33	2,33	2,93	8,00	9,56	0,62	2,14	3,07	2,82	9,80	14,05	95
	1.5+3.5+3.5+4.2	0,94	2,20	2,20	2,65	3,02	8,00	9,67	0,62	2,13	3,21	2,82	9,75	14,70	95
	1.5+3.5+3.5+5.0	0,89	2,07	2,07	2,96	3,13	8,00	9,75	0,65	2,08	3,16	2,99	9,52	14,46	95
	1.5+3.5+3.5+6.0	0,83	1,93	1,93	3,31	3,27	8,00	9,77	0,66	2,05	2,93	3,03	9,39	13,40	95
	1.5+3.5+4.2+4.2	0,90	2,09	2,51	2,51	3,12	8,00	9,74	0,65	2,12	3,28	2,99	9,71	15,03	95
	1.5+3.5+4.2+5.0	0,85	1,97	2,37	2,82	3,23	8,00	9,77	0,65	2,07	3,24	2,99	9,48	14,83	95
	1.5+4.2+4.2+4.2	0,85	2,38	2,38	2,38	3,22	8,00	9,77	0,69	2,11	3,28	3,16	9,66	15,03	95
	2.0+2.0+2.0+2.0	1,85	1,85	1,85	1,85	2,39	7,40	8,06	0,52	1,62	2,12	2,36	7,42	9,69	95
	2.0+2.0+2.0+2.5	1,88	1,88	1,88	2,35	2,46	8,00	8,32	0,52	1,95	2,23	2,36	8,93	10,22	95
	2.0+2.0+2.0+3.5	1,68	1,68	1,68	2,95	2,58	8,00	8,79	0,55	1,94	2,55	2,53	8,88	11,65	95
	2.0+2.0+2.0+4.2	1,57	1,57	1,57	3,29	2,68	8,00	9,07	0,59	2,26	2,67	2,69	10,35	12,22	95
	2.0+2.0+2.0+5.0	1,45	1,45	1,45	3,64	2,79	8,00	9,33	0,59	2,30	2,95	2,69	10,53	13,52	95
	2.0+2.0+2.0+6.0	1,33	1,33	1,33	4,00	2,93	8,00	9,58	0,63	2,26	2,86	2,86	10,35	13,08	95
	2.0+2.0+2.0+7.1	1,22	1,22	1,22	4,34	3,08	8,00	9,74	0,63	2,20	2,93	2,86	10,07	13,40	95
	2.0+2.0+2.5+2.5	1,73	1,73	2,17	2,17	2,52	7,80	8,57	0,55	1,76	2,42	2,53	8,06	11,08	95
	2.0+2.0+2.5+3.5	1,60	1,60	2,00	2,80	2,65	8,00	9,00	0,55	2,21	2,79	2,53	10,12	12,79	95
	2.0+2.0+2.5+4.2	1,50	1,50	1,87	3,14	2,75	8,00	9,24	0,59	2,31	2,94	2,69	10,58	13,44	95
	2.0+2.0+2.5+5.0	1,39	1,39	1,74	3,48	2,86	8,00	9,47	0,59	2,25	3,02	2,69	10,30	13,81	95
	2.0+2.0+2.5+6.0	1,28	1,28	1,60	3,84	3,00	8,00	9,66	0,63	2,21	2,86	2,86	10,12	13,08	95
	2.0+2.0+2.5+7.1	1,18	1,18	1,47	4,18	3,15	8,00	9,78	0,66	2,18	2,93	3,03	9,98	13,40	95
	2.0+2.0+3.5+3.5	1,45	1,45	2,55	2,55	2,79	8,00	9,14	0,59	2,30	2,87	2,69	10,53	13,12	95
	2.0+2.0+3.5+4.2	1,37	1,37	2,39	2,87	2,89	8,00	9,51	0,62	2,28	3,14	2,82	10,44	14,38	95
	2.0+2.0+3.5+5.0	1,28	1,28	2,24	3,20	3,00	8,00	9,66	0,63	2,22	3,16	2,86	10,17	14,46	95
	2.0+2.0+3.5+6.0	1,19	1,19	2,07	3,56	3,13	8,00	9,77	0,66	2,19	2,93	3,03	10,03	13,40	95
	2.0+2.0+4.2+4.2	1,29	1,29	2,71	2,71	2,98	8,00	9,65	0,62	2,27	3,21	2,82	10,39	14,70	95
	2.0+2.0+4.2+5.0	1,21	1,21	2,55	3,03	3,09	8,00	9,75	0,65	2,21	3,16	2,99	10,12	14,46	95
	2.0+2.0+4.2+6.0	1,13	1,13	2,37	3,38	3,23	8,00	9,79	0,66	2,18	2,93	3,03	9,98	13,40	95
	2.0+2.0+5.0+5.0	1,14	1,14	2,86	2,86	3,20	8,00	9,79	0,65	2,20	3,12	2,99	10,07	14,26	95
	2.0+2.5+2.5+2.5	1,68	2,11	2,11	2,11	2,58	8,00	8,79	0,55	1,83	2,54	2,53	8,38	11,61	95
	2.0+2.5+2.5+3.5	1,52	1,90	1,90	2,67	2,72	8,00	9,17	0,59	2,21	2,93	2,69	10,12	13,40	95
	2.0+2.5+2.5+4.2	1,43	1,79	1,79	3,00	2,82	8,00	9,38	0,59	2,24	3,07	2,69	10,26	14,05	95
	2.0+2.5+2.5+5.0	1,33	1,67	1,67	3,33	2,93	8,00	9,58	0,63	2,18	3,09	2,86	9,98	14,13	95
	2.0+2.5+2.5+6.0	1,23	1,54	1,54	3,69	3,06	8,00	9,73	0,63	2,15	2,93	2,86	9,84	13,40	95
	2.0+2.5+2.5+7.1	1,13	1,42	1,42	4,03	3,22	8,00	9,79	0,66	2,12	2,93	3,03	9,71	13,40	95
	2.0+2.5+3.5+3.5	1,39	1,74	2,43	2,43	2,86	8,00	9,32	0,62	2,20	3,00	2,82	10,07	13,73	95

Notes

1. The total capacity of each connected indoor unit is up to ·14.5·kW.
2. The values above are for connecting with the following indoor unit types:
   ·1.5,2.0,2.5,3.5,4.2,5.0,6.0,7.1· kW class
   Wall-mounted ·FTXM-M, FTXM-N, FTXM-R· series
3. Cooling capacity conditions
   Indoor temperature ·27·°C DB / ·19·°C WB
   Outdoor temperature ·35·°C DB
4. For additional information on the connection of the DHW generator for Multi and the Hybrid for Multi, see ·3D106169·.

3D105404A

4 Combination table

4 - 1 Combination Table

4MXM80N9

4

Cooling ·(50Hz 230V)·

Outdoor unit	Indoor unit	Cooling capacity [kW]				Total capacity [kW]			Power input [kW]			Total current [A]			Power factor [%]
		Room ·A·	Room ·B·	Room ·C·	Room ·D·	Min.	Nom.	Max.	Min.	Nom.	Max.	Min.	Nom.	Max.	
4MXM80N2V1B 4MXM80N2V1B9	2.0+2.5+3.5+4.2	1,31	1,64	2,30	2,75	2,95	8,00	9,66	0,62	2,19	3,21	2,82	10,03	14,70	95
	2.0+2.5+3.5+5.0	1,23	1,54	2,15	3,08	3,06	8,00	9,73	0,65	2,13	3,16	2,99	9,75	14,46	95
	2.0+2.5+3.5+6.0	1,14	1,43	2,00	3,43	3,20	8,00	9,79	0,66	2,10	2,93	3,03	9,62	13,40	95
	2.0+2.5+4.2+4.2	1,24	1,55	2,60	2,60	3,05	8,00	9,72	0,65	2,18	3,28	2,99	9,98	15,03	95
	2.0+2.5+4.2+5.0	1,17	1,46	2,45	2,92	3,16	8,00	9,78	0,65	2,12	3,23	2,99	9,71	14,79	95
	2.0+2.5+5.0+5.0	1,10	1,38	2,76	2,76	3,27	8,00	9,79	0,65	2,11	3,12	2,99	9,66	14,26	95
	2.0+3.5+3.5+3.5	1,28	2,24	2,24	2,24	3,00	8,00	9,41	0,62	2,18	2,94	2,82	9,98	13,44	95
	2.0+3.5+3.5+4.2	1,21	2,12	2,12	2,55	3,09	8,00	9,75	0,65	2,17	3,28	2,99	9,94	15,03	95
	2.0+3.5+3.5+5.0	1,14	2,00	2,00	2,86	3,20	8,00	9,79	0,65	2,11	3,23	2,99	9,66	14,79	95
	2.0+3.5+4.2+4.2	1,15	2,01	2,42	2,42	3,19	8,00	9,79	0,65	2,15	3,36	2,99	9,84	15,36	95
	2.5+2.5+2.5+2.5	2,00	2,00	2,00	2,00	2,65	8,00	9,00	0,55	2,17	2,79	2,53	9,94	12,79	95
	2.5+2.5+2.5+3.5	1,82	1,82	1,82	2,55	2,79	8,00	9,16	0,59	2,23	2,87	2,69	10,21	13,12	95
	2.5+2.5+2.5+4.2	1,71	1,71	1,71	2,87	2,89	8,00	9,51	0,62	2,21	3,14	2,82	10,12	14,38	95
	2.5+2.5+2.5+5.0	1,60	1,60	1,60	3,20	3,00	8,00	9,66	0,63	2,15	3,16	2,86	9,84	14,46	95
	2.5+2.5+2.5+6.0	1,48	1,48	1,48	3,56	3,13	8,00	9,77	0,66	2,13	2,93	3,03	9,75	13,40	95
	2.5+2.5+3.5+3.5	1,67	1,67	2,33	2,33	2,93	8,00	9,28	0,62	2,21	3,00	2,82	10,12	13,73	95
	2.5+2.5+3.5+4.2	1,57	1,57	2,20	2,65	3,02	8,00	9,69	0,62	2,20	3,28	2,82	10,07	15,03	95
	2.5+2.5+3.5+5.0	1,48	1,48	2,07	2,96	3,13	8,00	9,77	0,65	2,14	3,23	2,99	9,80	14,79	95
	2.5+2.5+3.5+6.0	1,38	1,38	1,93	3,31	3,27	8,00	9,79	0,66	2,12	2,93	3,03	9,71	13,40	95
	2.5+2.5+4.2+4.2	1,49	1,49	2,51	2,51	3,12	8,00	9,76	0,65	2,19	3,28	2,99	10,03	15,03	95
	2.5+2.5+4.2+5.0	1,41	1,41	2,37	2,82	3,23	8,00	9,79	0,65	2,13	3,23	2,99	9,75	14,79	95
	2.5+3.5+3.5+3.5	1,54	2,15	2,15	2,15	3,06	8,00	9,54	0,65	2,20	2,94	2,99	10,07	13,44	95
	2.5+3.5+3.5+4.2	1,46	2,04	2,04	2,45	3,16	8,00	9,78	0,65	2,19	3,36	2,99	10,03	15,36	95
	2.5+3.5+3.5+5.0	1,38	1,93	1,93	2,76	3,27	8,00	9,79	0,69	2,13	3,23	3,16	9,75	14,79	95
	2.5+3.5+4.2+4.2	1,39	1,94	2,33	2,33	3,26	8,00	9,79	0,69	2,18	3,36	3,16	9,98	15,36	95
	3.5+3.5+3.5+3.5	2,00	2,00	2,00	2,00	3,20	8,00	9,79	0,65	2,19	3,36	2,99	10,03	15,36	95

Notes

1. The total capacity of each connected indoor unit is up to ·14.5·kW.
2. The values above are for connecting with the following indoor unit types:
   ·2.0,2.5,3.5,4.2,5.0,6.0· kW class
   Wall-mounted ·FTXM-M· series
3. Cooling capacity conditions
   Indoor temperature ·27·°C DB / ·19·°C WB
   Outdoor temperature ·35·°C DB
4. For additional information on the connection of the DHW generator for Multi and the Hybrid for Multi, see ·3D106169·.

3D105411A

4 Combination table

4 - 1 Combination Table

4MXM80N9

Heating ·(50Hz 230V)·

Outdoor unit	Indoor unit	Heating capacity [kW]				Total capacity [kW]			Power input [kW]			Total current [A]			Power factor [%]
		Room ·A·	Room ·B·	Room ·C·	Room ·D·	Minimum	Nominal	Maximum	Minimum	Nominal	Maximum	Minimum	Nominal	Maximum	
4MXM80N2V1B 4MXM80N2V1B9	1,5	1,88	---	---	---	1,25	1,88	4,10	0,29	0,51	1,23	1,33	2,34	5,63	95
	2,0	2,46	---	---	---	1,28	2,46	4,26	0,30	0,66	1,29	1,38	3,01	5,90	95
	2,5	3,08	---	---	---	1,33	3,08	4,73	0,32	0,86	1,38	1,46	3,95	6,32	95
	3,5	4,31	---	---	---	1,45	4,31	5,31	0,33	1,39	1,68	1,51	6,37	7,68	95
	4,2	---	5,18	---	---	1,49	5,18	6,16	0,34	1,63	1,90	1,55	7,45	8,70	95
	5,0	---	6,15	---	---	1,86	6,15	7,40	0,43	1,74	2,77	1,95	7,99	12,68	95
	6,0	---	7,38	---	---	2,15	7,38	9,00	0,53	2,15	3,11	2,44	9,83	14,23	95
	7,1	---	8,74	---	---	2,45	8,74	9,36	0,57	2,71	3,45	2,62	12,43	15,79	95
	1.5+1.5	1,85	1,85	---	---	1,45	3,70	7,43	0,41	0,86	1,84	1,89	3,94	8,42	95
	1.5+2.0	1,84	2,46	---	---	1,51	4,30	7,81	0,41	1,01	2,00	1,89	4,63	9,15	95
	1.5+2.5	1,84	3,06	---	---	1,65	4,90	8,00	0,45	1,17	2,07	2,06	5,36	9,47	95
	1.5+3.5	1,83	4,27	---	---	1,94	6,10	8,55	0,52	1,64	2,36	2,37	7,51	10,80	95
	1.5+4.2	1,84	5,16	---	---	2,14	7,00	8,90	0,55	1,94	2,58	2,54	8,88	11,81	95
	1.5+5.0	1,85	6,15	---	---	2,38	8,00	10,43	0,50	2,11	2,92	2,28	9,66	13,36	95
	1.5+6.0	1,80	7,20	---	---	2,66	9,00	10,63	0,52	2,30	2,68	2,37	10,53	12,27	95
	1.5+7.1	1,67	7,93	---	---	2,96	9,60	10,65	0,55	2,47	2,42	2,50	11,31	11,56	95
	2.0+2.0	2,45	2,45	---	---	1,65	4,90	8,00	0,32	1,16	2,32	1,46	5,31	10,62	95
	2.0+2.5	2,44	3,06	---	---	1,80	5,50	8,17	0,35	1,34	2,33	1,59	6,14	10,66	95
	2.0+3.5	2,44	4,26	---	---	2,09	6,70	8,72	0,40	1,70	2,44	1,85	7,79	11,17	95
	2.0+4.2	2,45	5,15	---	---	2,28	7,60	9,08	0,44	1,98	2,67	2,02	9,07	12,22	95
	2.0+5.0	2,43	6,07	---	---	2,52	8,50	10,61	0,52	2,28	3,01	2,37	10,44	13,78	95
	2.0+6.0	2,33	6,98	---	---	2,79	9,30	10,80	0,54	2,42	2,75	2,45	11,08	12,59	95
	2.0+7.1	2,11	7,49	---	---	3,10	9,60	10,90	0,57	2,47	2,66	2,62	11,31	12,17	95
	2.5+2.5	3,05	3,05	---	---	1,94	6,10	8,54	0,39	1,68	2,37	1,76	7,69	10,85	95
	2.5+3.5	3,04	4,26	---	---	2,23	7,30	9,10	0,52	2,02	2,67	2,37	9,25	12,22	95
	2.5+4.2	3,06	5,14	---	---	2,44	8,20	9,37	0,54	2,28	2,83	2,45	10,44	12,95	95
	2.5+5.0	3,00	6,00	---	---	2,66	9,00	10,70	0,54	2,51	3,10	2,45	11,49	14,19	95
	2.5+6.0	2,82	6,78	---	---	2,94	9,60	10,90	0,55	2,63	2,78	2,54	12,04	12,72	95
	2.5+7.1	2,50	7,10	---	---	3,23	9,60	10,90	0,59	2,50	2,70	2,71	11,45	12,36	95
	3.5+3.5	4,25	4,25	---	---	2,52	8,50	9,55	0,55	2,47	2,87	2,54	11,31	13,14	95
	3.5+4.2	4,09	4,91	---	---	2,71	9,00	10,16	0,57	2,69	3,19	2,62	12,32	15,25	95
	3.5+5.0	3,91	5,59	---	---	2,94	9,50	10,92	0,58	2,66	3,14	2,67	12,18	14,37	95
	3.5+6.0	3,54	6,06	---	---	3,21	9,60	11,03	0,57	2,48	2,77	2,62	11,36	12,68	95
	3.5+7.1	3,17	6,43	---	---	3,52	9,60	11,05	0,63	2,42	2,61	2,88	11,08	11,95	95
	4.2+4.2	4,75	4,75	---	---	2,91	9,50	9,98	0,59	2,55	2,95	2,71	11,68	11,82	95
	4.2+5.0	4,38	5,22	---	---	3,13	9,60	10,93	0,60	2,59	3,20	2,75	11,86	14,65	95
	4.2+6.0	3,95	5,65	---	---	3,41	9,60	11,05	0,61	2,39	2,80	2,80	10,94	12,81	95
	4.2+7.1	3,57	6,03	---	---	3,70	9,60	11,07	0,66	2,38	2,60	3,01	10,90	11,90	95
	5.0+5.0	4,80	4,80	---	---	3,35	9,60	11,10	0,63	2,46	3,12	2,88	11,26	14,28	95
	5.0+6.0	4,36	5,24	---	---	3,62	9,60	11,12	0,62	2,35	2,73	2,84	10,76	12,49	95

Notes

1. The total capacity of each connected indoor unit is up to ·14.5·kW.
2. The values above are for connecting with the following indoor unit types:
   ·1.5, 2.0, 2.5, 3.5, 4.2, 5.0, 6.0, 7.1· kW class
   Wall-mounted ·FTXM-M, FTXM-N, FTXM-R· series
3. Heating capacity conditions
   Indoor temperature ·20·°C DB
   Outdoor temperature ·7·°C DB / ·6·°C WB
4. For additional information on the connection of the DHW generator for Multi and the Hybrid for Multi, see ·3D106169·.

3D105412C

4 Combination table

4 - 1 Combination Table

4MXM80N9

4

Heating ·(50Hz 230V)·

Outdoor unit	Indoor unit	Heating capacity [kW]				Total capacity [kW]			Power input [kW]			Total current [A]			Power factor [%]
		Room ·A·	Room ·B·	Room ·C·	Room ·D·	Minimum	Nominal	Maximum	Minimum	Nominal	Maximum	Minimum	Nominal	Maximum	
4MXM80M2V1B 4MXM80N2V1B 4MXM80N2V1B9	5.0+7.1	3,97	5,63	---	---	3,93	9,60	11,14	0,66	2,33	2,57	3,01	10,67	11,76	95
	6.0+6.0	4,80	4,80	---	---	3,90	9,60	11,14	0,63	2,27	2,55	2,88	10,39	11,67	95
	6.0+7.1	4,40	5,20	---	---	4,20	9,60	11,16	0,67	2,26	2,54	3,05	10,35	11,62	95
	7.1+7.1	4,80	4,80	---	---	4,51	9,60	11,20	0,73	2,20	2,48	3,36	10,07	11,86	95
	1.5+1.5+1.5	1,83	1,83	1,83	---	1,80	5,50	9,95	0,40	1,14	2,27	1,85	5,22	10,39	95
	1.5+1.5+2.0	1,83	1,83	2,44	---	1,94	6,10	10,13	0,41	1,32	2,35	1,89	6,05	10,76	95
	1.5+1.5+2.5	1,83	1,83	3,05	---	2,09	6,70	10,21	0,43	1,49	2,38	1,98	6,82	10,89	95
	1.5+1.5+3.5	1,85	1,85	4,31	---	2,38	8,00	10,32	0,47	1,88	2,50	2,15	8,61	11,44	95
	1.5+1.5+4.2	1,81	1,81	5,08	---	2,58	8,70	10,32	0,49	2,15	2,50	2,24	9,84	11,44	95
	1.5+1.5+5.0	1,74	1,74	5,81	---	2,79	9,30	10,49	0,50	2,21	2,58	2,28	10,12	11,81	95
	1.5+1.5+6.0	1,58	1,58	6,33	---	3,07	9,50	11,14	0,51	2,20	2,50	2,32	10,07	11,95	95
	1.5+1.5+7.1	1,43	1,43	6,75	---	3,38	9,60	11,17	0,54	2,21	2,49	2,45	10,12	11,91	95
	1.5+2.0+2.0	1,83	2,44	2,44	---	2,09	6,70	10,29	0,43	1,49	2,42	1,98	6,82	11,08	95
	1.5+2.0+2.5	1,83	2,43	3,04	---	2,23	7,30	10,39	0,45	1,68	2,45	2,06	7,69	11,21	95
	1.5+2.0+3.5	1,82	2,43	4,25	---	2,52	8,50	10,48	0,49	2,06	2,59	2,24	9,43	11,85	95
	1.5+2.0+4.2	1,75	2,34	4,91	---	2,71	9,00	10,49	0,51	2,22	2,58	2,32	10,17	11,81	95
	1.5+2.0+5.0	1,69	2,26	5,65	---	2,94	9,60	10,91	0,52	2,34	2,65	2,37	10,71	12,13	95
	1.5+2.0+6.0	1,52	2,02	6,06	---	3,21	9,60	11,14	0,53	2,22	2,50	2,41	10,17	11,95	95
	1.5+2.0+7.1	1,36	1,81	6,43	---	3,52	9,60	11,17	0,56	2,21	2,49	2,58	10,12	11,91	95
	1.5+2.5+2.5	1,85	3,08	3,08	---	2,38	8,00	10,50	0,47	1,95	2,45	2,15	8,93	11,21	95
	1.5+2.5+3.5	1,80	3,00	4,20	---	2,66	9,00	10,61	0,51	2,22	2,58	2,32	10,17	11,81	95
	1.5+2.5+4.2	1,76	2,93	4,92	---	2,86	9,60	10,61	0,53	2,42	2,58	2,41	11,08	11,81	95
	1.5+2.5+5.0	1,60	2,67	5,33	---	3,07	9,60	11,03	0,54	2,34	2,65	2,45	10,71	12,13	95
	1.5+2.5+6.0	1,44	2,40	5,76	---	3,35	9,60	11,14	0,55	2,22	2,50	2,50	10,17	11,95	95
	1.5+2.5+7.1	1,30	2,16	6,14	---	3,65	9,60	11,17	0,58	2,21	2,49	2,67	10,12	11,91	95
	1.5+3.5+3.5	1,69	3,95	3,95	---	2,94	9,60	10,62	0,55	2,38	2,58	2,54	10,90	11,81	95
	1.5+3.5+4.2	1,57	3,65	4,38	---	3,13	9,60	10,77	0,57	2,38	2,61	2,62	10,90	12,48	95
	1.5+3.5+5.0	1,44	3,36	4,80	---	3,35	9,60	10,96	0,57	2,34	2,60	2,62	10,71	11,90	95
	1.5+3.5+6.0	1,31	3,05	5,24	---	3,62	9,60	11,15	0,58	2,22	2,50	2,67	10,17	11,95	95
	1.5+3.5+7.1	1,19	2,78	5,63	---	3,93	9,60	11,18	0,62	2,21	2,48	2,84	10,12	11,86	95
	1.5+4.2+4.2	1,45	4,07	4,07	---	3,33	9,60	10,78	0,59	2,38	2,61	2,71	10,90	12,48	95
	1.5+4.2+5.0	1,35	3,77	4,49	---	3,54	9,60	11,02	0,62	2,34	2,68	2,84	10,71	12,27	95
	1.5+4.2+6.0	1,23	3,45	4,92	---	3,81	9,60	11,27	0,60	2,22	2,80	2,75	10,17	11,91	95
	1.5+4.2+7.1	1,13	3,15	5,33	---	4,12	9,60	11,30	0,67	2,21	2,78	3,05	10,12	11,86	95
	1.5+5.0+5.0	1,25	4,17	4,17	---	3,76	9,60	11,17	0,62	2,25	2,83	2,84	10,30	12,08	95
	1.5+5.0+6.0	1,15	3,84	4,61	---	4,04	9,60	11,41	0,63	2,14	2,75	2,88	9,80	11,95	95
	1.5+5.0+7.1	1,06	3,53	5,01	---	4,35	9,60	11,44	0,67	2,13	2,73	3,05	9,75	11,91	95
	1.5+6.0+6.0	1,07	4,27	4,27	---	4,31	9,60	11,65	0,64	2,07	2,67	2,93	9,48	11,60	95
	2.0+2.0+2.0	2,50	2,50	2,50	---	2,23	7,50	10,47	0,45	1,73	2,49	2,06	7,92	11,40	95
	2.0+2.0+2.5	2,46	2,46	3,08	---	2,38	8,00	10,55	0,47	1,87	2,53	2,15	8,56	11,58	95

Notes

1. The total capacity of each connected indoor unit is up to ·14.5·kW.
2. The values above are for connecting with the following indoor unit types:
   ·1.5, 2.0, 2.5, 3.5, 4.2, 5.0, 6.0, 7.1· kW class
   Wall-mounted ·FTXM-M, FTXM-N, FTXM-R· series
3. Heating capacity conditions
   Indoor temperature ·20·°C DB
   Outdoor temperature ·7·°C DB / ·6·°C WB
4.
   For additional information on the connection of the DHW generator for Multi and the Hybrid for Multi, see ·3D106169·.

3D105413C

4 Combination table

4 - 1 Combination Table

4MXM80N9

Heating ·(50Hz 230V)·

Outdoor unit	Indoor unit	Heating capacity [kW]				Total capacity [kW]			Power input [kW]			Total current [A]			Power factor [%]
		Room ·A·	Room ·B·	Room ·C·	Room ·D·	Minimum	Nominal	Maximum	Minimum	Nominal	Maximum	Minimum	Nominal	Maximum	
4MXM80M2V1B 4MXM80N2V1B 4MXM80N2V1B9	2.0+2.0+3.5	2,40	2,40	4,20	---	2,66	9,00	10,66	0,51	2,21	2,66	2,32	10,12	12,17	95
	2.0+2.0+4.2	2,29	2,29	4,81	---	2,86	9,40	10,66	0,53	2,41	2,66	2,41	11,03	11,99	95
	2.0+2.0+5.0	2,13	2,13	5,33	---	3,07	9,60	10,90	0,54	2,38	2,73	2,45	10,90	12,49	95
	2.0+2.0+6.0	1,92	1,92	5,76	---	3,35	9,60	11,14	0,55	2,26	2,50	2,50	10,35	11,95	95
	2.0+2.0+7.1	1,73	1,73	6,14	---	3,65	9,60	11,17	0,58	2,25	2,49	2,67	10,30	11,91	95
	2.0+2.5+2.5	2,43	3,04	3,04	---	2,52	8,50	10,57	0,49	2,10	2,62	2,24	9,62	11,99	95
	2.0+2.5+3.5	2,33	2,91	4,07	---	2,79	9,30	10,66	0,53	2,39	2,66	2,41	10,94	12,17	95
	2.0+2.5+4.2	2,21	2,76	4,63	---	2,99	9,60	10,67	0,55	2,50	2,64	2,54	11,45	12,08	95
	2.0+2.5+5.0	2,02	2,53	5,05	---	3,21	9,60	11,09	0,55	2,34	2,76	2,54	10,71	12,63	95
	2.0+2.5+6.0	1,83	2,29	5,49	---	3,49	9,60	11,14	0,56	2,22	2,50	2,58	10,17	11,95	95
	2.0+2.5+7.1	1,66	2,07	5,88	---	3,79	9,60	11,17	0,60	2,21	2,49	2,75	10,12	11,91	95
	2.0+3.5+3.5	2,13	3,73	3,73	---	3,07	9,60	10,76	0,55	2,38	2,61	2,54	10,90	12,48	95
	2.0+3.5+4.2	1,98	3,46	4,16	---	3,26	9,60	10,77	0,59	2,38	2,61	2,71	10,90	12,48	95
	2.0+3.5+5.0	1,83	3,20	4,57	---	3,49	9,60	11,14	0,59	2,34	2,83	2,71	10,71	12,95	95
	2.0+3.5+6.0	1,67	2,92	5,01	---	3,76	9,60	11,15	0,60	2,22	2,50	2,75	10,17	11,95	95
	2.0+3.5+7.1	1,52	2,67	5,41	---	4,07	9,60	11,18	0,65	2,21	2,48	2,97	10,12	11,86	95
	2.0+4.2+4.2	1,85	3,88	3,88	---	3,46	9,60	10,78	0,61	2,38	2,61	2,80	10,90	12,48	95
	2.0+4.2+5.0	1,71	3,60	4,29	---	3,68	9,60	10,91	0,64	2,34	2,57	2,93	10,71	12,26	95
	2.0+4.2+6.0	1,57	3,30	4,72	---	3,96	9,60	11,15	0,63	2,22	2,49	2,88	10,17	11,91	95
	2.0+4.2+7.1	1,44	3,03	5,12	---	4,26	9,60	11,19	0,69	2,21	2,48	3,14	10,12	11,86	95
	2.0+5.0+5.0	1,60	4,00	4,00	---	3,90	9,60	11,04	0,64	2,25	2,53	2,93	10,30	12,08	95
	2.0+5.0+6.0	1,48	3,69	4,43	---	4,17	9,60	11,28	0,65	2,14	2,50	2,97	9,80	11,95	95
	2.0+5.0+7.1	1,36	3,40	4,83	---	4,48	9,60	11,32	0,70	2,13	2,49	3,18	9,75	11,91	95
	2.0+6.0+6.0	1,37	4,11	4,11	---	4,45	9,60	11,52	0,66	2,07	2,43	3,01	9,48	11,60	95
	2.5+2.5+2.5	3,20	3,20	3,20	---	2,66	9,60	10,70	0,51	2,49	2,65	2,32	11,40	12,13	95
	2.5+2.5+3.5	2,82	2,82	3,95	---	2,94	9,60	10,90	0,55	2,46	2,73	2,54	11,26	12,49	95
	2.5+2.5+4.2	2,61	2,61	4,38	---	3,13	9,60	11,02	0,57	2,44	2,81	2,62	11,17	13,40	95
	2.5+2.5+5.0	2,40	2,40	4,80	---	3,35	9,60	11,10	0,57	2,35	2,79	2,62	10,76	12,77	95
	2.5+2.5+6.0	2,18	2,18	5,24	---	3,62	9,60	11,14	0,58	2,26	2,50	2,67	10,35	11,95	95
	2.5+2.5+7.1	1,98	1,98	5,63	---	3,93	9,60	11,17	0,62	2,26	2,49	2,84	10,35	11,91	95
	2.5+3.5+3.5	2,53	3,54	3,54	---	3,21	9,60	11,03	0,57	2,41	2,73	2,62	11,03	12,49	95
	2.5+3.5+4.2	2,35	3,29	3,95	---	3,41	9,60	11,04	0,61	2,39	2,72	2,80	10,94	12,45	95
	2.5+3.5+5.0	2,18	3,05	4,36	---	3,62	9,60	11,10	0,62	2,30	2,75	2,84	10,53	12,59	95
	2.5+3.5+6.0	2,00	2,80	4,80	---	3,90	9,60	11,15	0,63	2,25	2,50	2,88	10,30	11,95	95
	2.5+3.5+7.1	1,83	2,56	5,20	---	4,20	9,60	11,18	0,67	2,21	2,48	3,05	10,12	11,86	95
	2.5+4.2+4.2	2,20	3,70	3,70	---	3,60	9,60	11,04	0,64	2,37	2,72	2,93	10,85	12,45	95
	2.5+4.2+5.0	2,05	3,45	4,10	---	3,81	9,60	11,10	0,66	2,28	2,57	3,01	10,44	11,76	95
	2.5+4.2+6.0	1,89	3,17	4,54	---	4,09	9,60	11,15	0,65	2,24	2,49	2,97	10,26	11,91	95
	2.5+4.2+7.1	1,74	2,92	4,94	---	4,40	9,60	11,19	0,71	2,20	2,48	3,27	10,07	11,86	95
	2.5+5.0+5.0	1,92	3,84	3,84	---	4,04	9,60	11,04	0,67	2,26	2,53	3,05	10,35	12,08	95

Notes

1. The total capacity of each connected indoor unit is up to ·14.5·kW.
2. The values above are for connecting with the following indoor unit types:
   ·2.0, 2.5, 3.5, 4.2, 5.0, 6.0, 7.1· kW class
   Wall-mounted ·FTXM-M, FTXM-N, FTXM-R· series
3. Heating capacity conditions
   Indoor temperature ·20·°C DB
   Outdoor temperature ·7·°C DB / ·6·°C WB
4. For additional information on the connection of the DHW generator for Multi and the Hybrid for Multi, see ·3D106169·.

3D105414C

4 Combination table

4 - 1 Combination Table

4MXM80N9

4

Heating ·(50Hz 230V)·

Outdoor unit	Indoor unit	Heating capacity [kW]				Total capacity [kW]			Power input [kW]			Total current [A]			Power factor [%]
		Room ·A·	Room ·B·	Room ·C·	Room ·D·	Minimum	Nominal	Maximum	Minimum	Nominal	Maximum	Minimum	Nominal	Maximum	
4MXM80M2V1B 4MXM80N2V1B 4MXM80N2V1B9	2.5+5.0+6.0	1,78	3,56	4,27	---	4,31	9,60	11,28	0,68	2,18	2,50	3,10	9,98	11,95	95
	2.5+6.0+6.0	1,66	3,97	3,97	---	4,59	9,60	11,52	0,68	2,11	2,43	3,10	9,66	11,60	95
	3.5+3.5+3.5	3,20	3,20	3,20	---	3,49	9,60	11,09	0,61	2,42	2,80	2,80	11,08	12,81	95
	3.5+3.5+4.2	3,00	3,00	3,60	---	3,68	9,60	11,09	0,66	2,40	2,61	3,01	10,99	11,95	95
	3.5+3.5+5.0	2,80	2,80	4,00	---	3,90	9,60	11,10	0,66	2,37	2,57	3,01	10,85	11,76	95
	3.5+3.5+6.0	2,58	2,58	4,43	---	4,17	9,60	11,15	0,67	2,22	2,49	3,05	10,17	11,91	95
	3.5+3.5+7.1	2,38	2,38	4,83	---	4,48	9,60	11,19	0,71	2,21	2,48	3,27	10,12	11,86	95
	3.5+4.2+4.2	2,82	3,39	3,39	---	3,88	9,60	10,80	0,68	2,38	2,60	3,10	10,90	12,43	95
	3.5+4.2+5.0	2,65	3,17	3,78	---	4,09	9,60	10,92	0,71	2,35	2,57	3,23	10,76	12,26	95
	3.5+4.2+6.0	2,45	2,94	4,20	---	4,37	9,60	11,16	0,70	2,21	2,49	3,18	10,12	11,91	95
	3.5+5.0+5.0	2,49	3,56	3,56	---	4,31	9,60	11,06	0,71	2,25	2,53	3,27	10,30	12,08	95
	3.5+5.0+6.0	2,32	3,31	3,97	---	4,59	9,60	11,29	0,72	2,14	2,50	3,31	9,80	11,95	95
	4.2+4.2+4.2	3,20	3,20	3,20	---	4,07	9,60	10,80	0,71	2,36	2,60	3,23	10,81	12,43	95
	4.2+4.2+5.0	3,01	3,01	3,58	---	4,28	9,60	10,93	0,73	2,33	2,57	3,36	10,67	12,26	95
	4.2+4.2+6.0	2,80	2,80	4,00	---	4,56	9,60	11,17	0,74	2,21	2,49	3,40	10,12	11,91	95
	4.2+5.0+5.0	2,84	3,38	3,38	---	4,51	9,60	11,07	0,76	2,24	2,52	3,48	10,26	12,04	95
	1.5+1.5+1.5+1.5	1,83	1,83	1,83	1,83	2,23	7,30	10,10	0,39	1,61	2,13	1,76	7,37	9,75	95
	1.5+1.5+1.5+2.0	1,85	1,85	1,85	2,46	2,38	8,00	10,28	0,39	1,81	2,20	1,81	8,29	10,07	95
	1.5+1.5+1.5+2.5	1,82	1,82	1,82	3,04	2,52	8,50	10,39	0,41	1,95	2,21	1,89	8,93	10,11	95
	1.5+1.5+1.5+3.5	1,74	1,74	1,74	4,07	2,79	9,30	10,59	0,45	2,13	2,31	2,06	9,75	11,03	95
	1.5+1.5+1.5+4.2	1,66	1,66	1,66	4,63	2,99	9,60	11,16	0,48	2,21	2,49	2,19	10,12	11,91	95
	1.5+1.5+1.5+5.0	1,52	1,52	1,52	5,05	3,21	9,60	11,29	0,49	2,14	2,50	2,24	9,80	11,95	95
	1.5+1.5+1.5+6.0	1,37	1,37	1,37	5,49	3,49	9,60	11,53	0,49	2,06	2,43	2,24	9,43	11,60	95
	1.5+1.5+1.5+7.1	1,24	1,24	1,24	5,88	3,79	9,60	11,56	0,53	2,05	2,42	2,41	9,39	11,56	95
	1.5+1.5+2.0+2.0	1,82	1,82	2,43	2,43	2,52	8,50	10,47	0,41	1,99	2,27	1,89	9,11	10,39	95
	1.5+1.5+2.0+2.5	1,80	1,80	2,40	3,00	2,66	9,00	10,57	0,43	2,14	2,31	1,98	9,80	10,57	95
	1.5+1.5+2.0+3.5	1,69	1,69	2,26	3,95	2,94	9,60	10,67	0,49	2,22	2,30	2,24	10,17	10,53	95
	1.5+1.5+2.0+4.2	1,57	1,57	2,09	4,38	3,13	9,60	11,16	0,50	2,21	2,49	2,28	10,12	11,91	95
	1.5+1.5+2.0+5.0	1,44	1,44	1,92	4,80	3,35	9,60	11,29	0,51	2,14	2,50	2,32	9,80	11,95	95
	1.5+1.5+2.0+6.0	1,31	1,31	1,75	5,24	3,62	9,60	11,53	0,51	2,06	2,43	2,32	9,43	11,60	95
	1.5+1.5+2.0+7.1	1,19	1,19	1,59	5,63	3,93	9,60	11,56	0,55	2,05	2,42	2,50	9,39	11,56	95
	1.5+1.5+2.5+2.5	1,80	1,80	3,00	3,00	2,79	9,60	10,58	0,45	2,21	2,31	2,06	10,12	11,03	95
	1.5+1.5+2.5+3.5	1,60	1,60	2,67	3,73	3,07	9,60	11,15	0,51	2,22	2,49	2,32	10,17	11,91	95
	1.5+1.5+2.5+4.2	1,48	1,48	2,47	4,16	3,26	9,60	11,16	0,52	2,21	2,49	2,37	10,12	11,91	95
	1.5+1.5+2.5+5.0	1,37	1,37	2,29	4,57	3,49	9,60	11,29	0,53	2,14	2,50	2,41	9,80	11,95	95
	1.5+1.5+2.5+6.0	1,25	1,25	2,09	5,01	3,76	9,60	11,53	0,54	2,06	2,43	2,45	9,43	11,60	95
	1.5+1.5+2.5+7.1	1,14	1,14	1,90	5,41	4,07	9,60	11,56	0,58	2,05	2,42	2,67	9,39	11,56	95
	1.5+1.5+3.5+3.5	1,44	1,44	3,36	3,36	3,35	9,60	11,16	0,55	2,21	2,49	2,50	10,12	11,91	95
	1.5+1.5+3.5+4.2	1,35	1,35	3,14	3,77	3,54	9,60	11,17	0,56	2,21	2,49	2,58	10,12	11,91	95
	1.5+1.5+3.5+5.0	1,25	1,25	2,92	4,17	3,76	9,60	11,29	0,58	2,13	2,49	2,67	9,75	11,91	95

Notes

1. The total capacity of each connected indoor unit is up to ·14.5·kW.
2. The values above are for connecting with the following indoor unit types:
   ·1.5, 2.0, 2.5, 3.5, 4.2, 5.0, 6.0, 7.1· kW class
   Wall-mounted ·FTXM-M, FTXM-N, FTXM-R· series
3. Heating capacity conditions
   Indoor temperature ·20·°C DB
   Outdoor temperature ·7·°C DB / ·6·°C WB
4. For additional information on the connection of the DHW generator for Multi and the Hybrid for Multi, see ·3D106169·.

3D105415C

4 Combination table

4 - 1 Combination Table

4MXM80N9

Heating ·(50Hz 230V)·

Outdoor unit	Indoor unit	Heating capacity [kW]				Total capacity [kW]			Power input [kW]			Total current [A]			Power factor [%]
		Room ·A·	Room ·B·	Room ·C·	Room ·D·	Minimum	Nominal	Maximum	Minimum	Nominal	Maximum	Minimum	Nominal	Maximum	
4MXM80M2V1B 4MXM80N2V1B 4MXM80N2V1B9	1.5+1.5+3.5+6.0	1,15	1,15	2,69	4,61	4,04	9,60	11,53	0,57	2,06	2,42	2,62	9,43	11,56	95
	1.5+1.5+3.5+7.1	1,06	1,06	2,47	5,01	4,35	9,60	11,58	0,63	2,05	2,41	2,88	9,39	11,51	95
	1.5+1.5+4.2+4.2	1,26	1,26	3,54	3,54	3,73	9,60	11,18	0,60	2,21	2,48	2,75	10,12	11,86	95
	1.5+1.5+4.2+5.0	1,18	1,18	3,30	3,93	3,96	9,60	11,30	0,60	2,13	2,49	2,75	9,75	11,91	95
	1.5+1.5+4.2+6.0	1,09	1,09	3,05	4,36	4,23	9,60	11,54	0,61	2,06	2,42	2,80	9,43	11,56	95
	1.5+1.5+4.2+7.1	1,01	1,01	2,82	4,77	4,54	9,60	11,58	0,65	2,05	2,41	2,97	9,39	11,51	95
	1.5+1.5+5.0+5.0	1,11	1,11	3,69	3,69	4,17	9,60	11,44	0,63	2,09	2,46	2,88	9,57	11,73	95
	1.5+1.5+5.0+6.0	1,03	1,03	3,43	4,11	4,45	9,60	11,68	0,63	1,97	2,38	2,88	9,02	11,38	95
	1.5+2.0+2.0+2.0	1,90	2,53	2,53	2,53	2,66	9,50	10,66	0,43	2,26	2,35	1,98	10,35	10,76	95
	1.5+2.0+2.0+2.5	1,80	2,40	2,40	3,00	2,79	9,60	10,75	0,45	2,26	2,36	2,06	10,35	10,80	95
	1.5+2.0+2.0+3.5	1,60	2,13	2,13	3,73	3,07	9,60	11,15	0,51	2,25	2,49	2,32	10,30	11,91	95
	1.5+2.0+2.0+4.2	1,48	1,98	1,98	4,16	3,26	9,60	11,16	0,52	2,23	2,49	2,37	10,21	11,91	95
	1.5+2.0+2.0+5.0	1,37	1,83	1,83	4,57	3,49	9,60	11,29	0,53	2,14	2,50	2,41	9,80	11,95	95
	1.5+2.0+2.0+6.0	1,25	1,67	1,67	5,01	3,76	9,60	11,53	0,54	2,06	2,43	2,45	9,43	11,60	95
	1.5+2.0+2.0+7.1	1,14	1,52	1,52	5,41	4,07	9,60	11,56	0,58	2,05	2,42	2,67	9,39	11,56	95
	1.5+2.0+2.5+2.5	1,69	2,26	2,82	2,82	2,94	9,60	10,75	0,49	2,22	2,31	2,24	10,17	10,57	95
	1.5+2.0+2.5+3.5	1,52	2,02	2,53	3,54	3,21	9,60	11,15	0,53	2,22	2,49	2,41	10,17	11,91	95
	1.5+2.0+2.5+4.2	1,41	1,88	2,35	3,95	3,41	9,60	11,16	0,55	2,21	2,49	2,50	10,12	11,91	95
	1.5+2.0+2.5+5.0	1,31	1,75	2,18	4,36	3,62	9,60	11,29	0,56	2,14	2,50	2,58	9,80	11,95	95
	1.5+2.0+2.5+6.0	1,20	1,60	2,00	4,80	3,90	9,60	11,53	0,55	2,06	2,43	2,54	9,43	11,60	95
	1.5+2.0+2.5+7.1	1,10	1,47	1,83	5,20	4,20	9,60	11,56	0,61	2,05	2,42	2,80	9,39	11,56	95
	1.5+2.0+3.5+3.5	1,37	1,83	3,20	3,20	3,49	9,60	11,16	0,56	2,21	2,49	2,58	10,12	11,91	95
	1.5+2.0+3.5+4.2	1,29	1,71	3,00	3,60	3,68	9,60	11,17	0,58	2,21	2,49	2,67	10,12	11,91	95
	1.5+2.0+3.5+5.0	1,20	1,60	2,80	4,00	3,90	9,60	11,29	0,60	2,13	2,49	2,75	9,75	11,91	95
	1.5+2.0+3.5+6.0	1,11	1,48	2,58	4,43	4,17	9,60	11,53	0,61	2,06	2,42	2,80	9,43	11,56	95
	1.5+2.0+3.5+7.1	1,02	1,36	2,38	4,83	4,48	9,60	11,58	0,65	2,05	2,41	2,97	9,39	11,51	95
	1.5+2.0+4.2+4.2	1,21	1,61	3,39	3,39	3,88	9,60	11,18	0,62	2,25	2,48	2,84	10,30	11,86	95
	1.5+2.0+4.2+5.0	1,13	1,51	3,17	3,78	4,09	9,60	11,30	0,63	2,13	2,49	2,88	9,75	11,91	95
	1.5+2.0+4.2+6.0	1,05	1,40	2,94	4,20	4,37	9,60	11,54	0,63	2,06	2,42	2,88	9,43	11,56	95
	1.5+2.0+5.0+5.0	1,07	1,42	3,56	3,56	4,31	9,60	11,44	0,65	2,09	2,46	2,97	9,57	11,73	95
	1.5+2.0+5.0+6.0	0,99	1,32	3,31	3,97	4,59	9,60	11,68	0,66	1,97	2,38	3,01	9,02	11,38	95
	1.5+2.5+2.5+2.5	1,60	2,67	2,67	2,67	3,07	9,60	11,14	0,51	2,22	2,50	2,32	10,17	11,95	95
	1.5+2.5+2.5+3.5	1,44	2,40	2,40	3,36	3,35	9,60	11,15	0,55	2,22	2,49	2,50	10,17	11,91	95
	1.5+2.5+2.5+4.2	1,35	2,24	2,24	3,77	3,54	9,60	11,16	0,56	2,21	2,49	2,58	10,12	11,91	95
	1.5+2.5+2.5+5.0	1,25	2,09	2,09	4,17	3,76	9,60	11,29	0,58	2,14	2,50	2,67	9,80	11,95	95
	1.5+2.5+2.5+6.0	1,15	1,92	1,92	4,61	4,04	9,60	11,53	0,57	2,06	2,43	2,62	9,43	11,60	95
	1.5+2.5+2.5+7.1	1,06	1,76	1,76	5,01	4,35	9,60	11,56	0,63	2,05	2,42	2,88	9,39	11,56	95
	1.5+2.5+3.5+3.5	1,31	2,18	3,05	3,05	3,62	9,60	11,16	0,58	2,21	2,49	2,67	10,12	11,91	95
	1.5+2.5+3.5+4.2	1,23	2,05	2,87	3,45	3,81	9,60	11,17	0,60	2,24	2,49	2,75	10,26	11,91	95
	1.5+2.5+3.5+5.0	1,15	1,92	2,69	3,84	4,04	9,60	11,29	0,63	2,13	2,49	2,88	9,75	11,91	95

Notes

1. The total capacity of each connected indoor unit is up to ·14.5·kW.
2. The values above are for connecting with the following indoor unit types:
   ·1.5, 2.0, 2.5, 3.5, 4.2, 5.0, 6.0, 7.1· kW class
   Wall-mounted ·FTXM-M, FTXM-N, FTXM-R· series
3. Heating capacity conditions
   Indoor temperature ·20·°C DB
   Outdoor temperature ·7·°C DB / ·6·°C WB
4. For additional information on the connection of the DHW generator for Multi and the Hybrid for Multi, see ·3D106169·.

3D105416C

4 Combination table

4 - 1 Combination Table

4

4MXM80N9

Heating ·(50Hz 230V)·

Outdoor unit	Indoor unit	Heating capacity [kW]				Total capacity [kW]			Power input [kW]			Total current [A]			Power factor [%]
		Room ·A·	Room ·B·	Room ·C·	Room ·D·	Minimum	Nominal	Maximum	Minimum	Nominal	Maximum	Minimum	Nominal	Maximum	
4MXM80M2V1B 4MXM80N2V1B 4MXM80N2V1B9	1.5+2.5+3.5+6.0	1,07	1,78	2,49	4,27	4,31	9,60	11,53	0,63	2,06	2,42	2,88	9,43	11,56	95
	1.5+2.5+4.2+4.2	1,16	1,94	3,25	3,25	4,01	9,60	11,18	0,65	2,25	2,48	2,97	10,30	11,86	95
	1.5+2.5+4.2+5.0	1,09	1,82	3,05	3,64	4,23	9,60	11,30	0,65	2,16	2,49	2,97	9,89	11,91	95
	1.5+2.5+4.2+6.0	1,01	1,69	2,84	4,06	4,51	9,60	11,54	0,66	2,06	2,42	3,01	9,43	11,56	95
	1.5+2.5+5.0+5.0	1,03	1,71	3,43	3,43	4,45	9,60	11,44	0,67	2,09	2,46	3,05	9,57	11,73	95
	1.5+3.5+3.5+3.5	1,20	2,80	2,80	2,80	3,90	9,60	11,17	0,62	2,21	2,49	2,84	10,12	11,91	95
	1.5+3.5+3.5+4.2	1,13	2,65	2,65	3,17	4,09	9,60	11,18	0,65	2,25	2,48	2,97	10,30	11,86	95
	1.5+3.5+3.5+5.0	1,07	2,49	2,49	3,56	4,31	9,60	11,30	0,67	2,13	2,49	3,05	9,75	11,91	95
	1.5+3.5+3.5+6.0	0,99	2,32	2,32	3,97	4,59	9,60	11,54	0,68	2,06	2,42	3,10	9,43	11,56	95
	1.5+3.5+4.2+4.2	1,07	2,51	3,01	3,01	4,28	9,60	11,18	0,69	2,25	2,48	3,14	10,30	11,86	95
	1.5+3.5+4.2+5.0	1,01	2,37	2,84	3,38	4,51	9,60	11,32	0,70	2,16	2,49	3,18	9,89	11,91	95
	1.5+4.2+4.2+4.2	1,02	2,86	2,86	2,86	4,48	9,60	11,19	0,71	2,23	2,48	3,27	10,21	11,86	95
	2.0+2.0+2.0+2.0	2,40	2,40	2,40	2,40	2,79	9,60	10,84	0,45	1,94	2,41	2,06	8,88	11,03	95
	2.0+2.0+2.0+2.5	2,26	2,26	2,26	2,82	2,94	9,60	10,93	0,49	2,35	2,42	2,24	10,76	11,08	95
	2.0+2.0+2.0+3.5	2,02	2,02	2,02	3,54	3,21	9,60	11,15	0,53	2,22	2,49	2,41	10,17	11,91	95
	2.0+2.0+2.0+4.2	1,88	1,88	1,88	3,95	3,41	9,60	11,16	0,55	2,21	2,49	2,50	10,12	11,91	95
	2.0+2.0+2.0+5.0	1,75	1,75	1,75	4,36	3,62	9,60	11,29	0,56	2,14	2,50	2,58	9,80	11,95	95
	2.0+2.0+2.0+6.0	1,60	1,60	1,60	4,80	3,90	9,60	11,53	0,55	2,06	2,43	2,54	9,43	11,60	95
	2.0+2.0+2.0+7.1	1,47	1,47	1,47	5,20	4,20	9,60	11,56	0,61	2,05	2,42	2,80	9,39	11,56	95
	2.0+2.0+2.5+2.5	2,13	2,13	2,67	2,67	3,07	9,60	11,14	0,51	2,22	2,50	2,32	10,17	11,95	95
	2.0+2.0+2.5+3.5	1,92	1,92	2,40	3,36	3,35	9,60	11,15	0,55	2,22	2,49	2,50	10,17	11,91	95
	2.0+2.0+2.5+4.2	1,79	1,79	2,24	3,77	3,54	9,60	11,16	0,56	2,21	2,49	2,58	10,12	11,91	95
	2.0+2.0+2.5+5.0	1,67	1,67	2,09	4,17	3,76	9,60	11,29	0,58	2,14	2,50	2,67	9,80	11,95	95
	2.0+2.0+2.5+6.0	1,54	1,54	1,92	4,61	4,04	9,60	11,53	0,57	2,06	2,43	2,62	9,43	11,60	95
	2.0+2.0+2.5+7.1	1,41	1,41	1,76	5,01	4,35	9,60	11,56	0,63	2,05	2,42	2,88	9,39	11,56	95
	2.0+2.0+3.5+3.5	1,75	1,75	3,05	3,05	3,62	9,60	11,16	0,58	2,21	2,49	2,67	10,12	11,91	95
	2.0+2.0+3.5+4.2	1,64	1,64	2,87	3,45	3,81	9,60	11,17	0,60	2,26	2,49	2,75	10,35	11,91	95
	2.0+2.0+3.5+5.0	1,54	1,54	2,69	3,84	4,04	9,60	11,29	0,63	2,13	2,49	2,88	9,75	11,91	95
	2.0+2.0+3.5+6.0	1,42	1,42	2,49	4,27	4,31	9,60	11,53	0,63	2,06	2,42	2,88	9,43	11,56	95
	2.0+2.0+4.2+4.2	1,55	1,55	3,25	3,25	4,01	9,60	11,18	0,62	2,25	2,48	2,84	10,30	11,86	95
	2.0+2.0+4.2+5.0	1,45	1,45	3,05	3,64	4,23	9,60	11,30	0,65	2,16	2,49	2,97	9,89	11,91	95
	2.0+2.0+4.2+6.0	1,35	1,35	2,84	4,06	4,51	9,60	11,54	0,66	2,06	2,42	3,01	9,43	11,56	95
	2.0+2.0+5.0+5.0	1,37	1,37	3,43	3,43	4,45	9,60	11,44	0,68	2,09	2,46	3,10	9,57	11,73	95
	2.0+2.5+2.5+2.5	2,02	2,53	2,53	2,53	3,21	9,60	11,14	0,53	2,22	2,50	2,41	10,17	11,95	95
	2.0+2.5+2.5+3.5	1,83	2,29	2,29	3,20	3,49	9,60	11,15	0,56	2,22	2,49	2,58	10,17	11,91	95
	2.0+2.5+2.5+4.2	1,71	2,14	2,14	3,60	3,68	9,60	11,16	0,58	2,26	2,49	2,67	10,35	11,91	95
	2.0+2.5+2.5+5.0	1,60	2,00	2,00	4,00	3,90	9,60	11,29	0,61	2,18	2,50	2,80	9,98	11,95	95
	2.0+2.5+2.5+6.0	1,48	1,85	1,85	4,43	4,17	9,60	11,53	0,61	2,06	2,43	2,80	9,43	11,60	95
	2.0+2.5+2.5+7.1	1,36	1,70	1,70	4,83	4,48	9,60	11,56	0,65	2,05	2,42	2,97	9,39	11,56	95
	2.0+2.5+3.5+3.5	1,67	2,09	2,92	2,92	3,76	9,60	11,16	0,60	2,25	2,49	2,75	10,30	11,91	95

Notes

1. The total capacity of each connected indoor unit is up to ·14.5·kW.
2. The values above are for connecting with the following indoor unit types:
   ·1.5, 2.0, 2.5, 3.5, 4.2, 5.0, 6.0, 7.1· kW class
   Wall-mounted ·FTXM-M, FTXM-N, FTXM-R· series
3. Heating capacity conditions
   Indoor temperature ·20·°C DB
   Outdoor temperature ·7·°C DB / ·6·°C WB
4. For additional information on the connection of the DHW generator for Multi and the Hybrid for Multi, see ·3D106169·.

3D105417C

4 Combination table

4 - 1 Combination Table

4MXM80N9

Heating ·(50Hz 230V)·

Outdoor unit	Indoor unit	Heating capacity [kW]				Total capacity [kW]			Power input [kW]			Total current [A]			Power factor [%]
		Room ·A·	Room ·B·	Room ·C·	Room ·D·	Minimum	Nominal	Maximum	Minimum	Nominal	Maximum	Minimum	Nominal	Maximum	
4MXM80M2V1B 4MXM80N2V1B 4MXM80N2V1B9	2.0+2.5+3.5+4.2	1,57	1,97	2,75	3,30	3,96	9,60	11,17	0,62	2,24	2,49	2,84	10,26	11,91	95
	2.0+2.5+3.5+5.0	1,48	1,85	2,58	3,69	4,17	9,60	11,29	0,65	2,16	2,49	2,97	9,89	11,91	95
	2.0+2.5+3.5+6.0	1,37	1,71	2,40	4,11	4,45	9,60	11,53	0,66	2,06	2,42	3,01	9,43	11,56	95
	2.0+2.5+4.2+4.2	1,49	1,86	3,13	3,13	4,15	9,60	11,18	0,65	2,23	2,48	2,97	10,21	11,86	95
	2.0+2.5+4.2+5.0	1,40	1,75	2,94	3,50	4,37	9,60	11,30	0,67	2,15	2,49	3,05	9,84	11,91	95
	2.0+2.5+5.0+5.0	1,32	1,66	3,31	3,31	4,59	9,60	11,44	0,70	2,12	2,46	3,18	9,71	11,73	95
	2.0+3.5+3.5+3.5	1,54	2,69	2,69	2,69	4,04	9,60	11,17	0,65	2,11	2,49	2,97	9,66	11,91	95
	2.0+3.5+3.5+4.2	1,45	2,55	2,55	3,05	4,23	9,60	11,18	0,67	2,25	2,48	3,05	10,30	11,86	95
	2.0+3.5+3.5+5.0	1,37	2,40	2,40	3,43	4,45	9,60	11,30	0,70	2,16	2,49	3,18	9,89	11,91	95
	2.0+3.5+4.2+4.2	1,38	2,42	2,90	2,90	4,43	9,60	11,18	0,71	2,23	2,48	3,27	10,21	11,86	95
	2.5+2.5+2.5+2.5	2,40	2,40	2,40	2,40	3,35	9,60	11,14	0,55	2,22	2,50	2,50	10,17	11,95	95
	2.5+2.5+2.5+3.5	2,18	2,18	2,18	3,05	3,62	9,60	11,15	0,58	2,26	2,49	2,67	10,35	11,91	95
	2.5+2.5+2.5+4.2	2,05	2,05	2,05	3,45	3,81	9,60	11,16	0,60	2,25	2,49	2,75	10,30	11,91	95
	2.5+2.5+2.5+5.0	1,92	1,92	1,92	3,84	4,04	9,60	11,29	0,63	2,16	2,50	2,88	9,89	11,95	95
	2.5+2.5+2.5+6.0	1,78	1,78	1,78	4,27	4,31	9,60	11,53	0,64	2,06	2,43	2,93	9,43	11,60	95
	2.5+2.5+3.5+3.5	2,00	2,00	2,80	2,80	3,90	9,60	11,16	0,63	2,25	2,49	2,88	10,30	11,91	95
	2.5+2.5+3.5+4.2	1,89	1,89	2,65	3,17	4,09	9,60	11,17	0,65	2,23	2,49	2,97	10,21	11,91	95
	2.5+2.5+3.5+5.0	1,78	1,78	2,49	3,56	4,31	9,60	11,29	0,67	2,15	2,49	3,05	9,84	11,91	95
	2.5+2.5+3.5+6.0	1,66	1,66	2,32	3,97	4,59	9,60	11,53	0,68	2,06	2,42	3,10	9,43	11,56	95
	2.5+2.5+4.2+4.2	1,79	1,79	3,01	3,01	4,28	9,60	11,18	0,67	2,21	2,48	3,05	10,12	11,86	95
	2.5+2.5+4.2+5.0	1,69	1,69	2,84	3,38	4,51	9,60	11,30	0,71	2,13	2,49	3,27	9,75	11,91	95
	2.5+3.5+3.5+3.5	1,85	2,58	2,58	2,58	4,17	9,60	11,17	0,67	2,25	2,49	3,05	10,30	11,91	95
	2.5+3.5+3.5+4.2	1,75	2,45	2,45	2,94	4,37	9,60	11,18	0,70	2,23	2,48	3,18	10,21	11,86	95
	2.5+3.5+3.5+5.0	1,66	2,32	2,32	3,31	4,59	9,60	11,30	0,71	2,15	2,49	3,27	9,84	11,91	95
	2.5+3.5+4.2+4.2	1,67	2,33	2,80	2,80	4,56	9,60	11,18	0,73	2,21	2,48	3,36	10,12	11,86	95
	3.5+3.5+3.5+3.5	2,40	2,40	2,40	2,40	4,45	9,60	11,18	0,71	2,19	2,48	3,27	10,03	11,86	95

Notes

1. The total capacity of each connected indoor unit is up to ·14.5·kW.
2. The values above are for connecting with the following indoor unit types:
   ·2.0, 2.5, 3.5, 4.2, 5.0, 6.0· kW class
   Wall-mounted ·FTXM-M, FTXM-N, FTXM-R· series
3. Heating capacity conditions
   Indoor temperature ·20·°C DB
   Outdoor temperature ·7·°C DB / ·6·°C WB
4. For additional information on the connection of the DHW generator for Multi and the Hybrid for Multi, see ·3D106169·.

–

3D105418C

4 Combination table

4 - 1 Combination Table

4MXM-N9

In the combination table, the DHW generator for Multi or Hybrid for Multi is indicated by a capacity index.

For the DHW generator for Multi, the capacity index is "·2.0·". For the Hybrid for Multi, the applicable capacity index (·Note 7·) is indicated on the applicable 'Technical specifications' datasheet.

If the DHW generator for Multi or Hybrid for Multi is present in the system, then only combinations that contain their respective capacity index are allowed combinations. Disregard all other combinations.

Example – DHW generator for Multi

Example: allowed combinations – with DHW generator for Multi	
2.0 + 2.5 + 2.5	DHW generator for Multi + ·2.5· kW class indoor unit + ·2.5· kW class indoor unit
1.5+ 1.5 + **2.0**	·1.5· kW class indoor unit + ·1.5· kW class indoor unit + DHW generator for Multi
2.0 + **2.0**	·2.0· kW class indoor unit + DHW generator for Multi
...	...

Example – Hybrid for Multi

Example: allowed combinations – with Hybrid for Multi	
1.5+1.5+5.0	·1.5· kW class indoor unit + ·1.5· kW class indoor unit + ·5.0· kW class Hybrid for Multi
2.0+5.0	·2.0· kW class indoor unit + ·5.0· kW class Hybrid for Multi
1.5+1.5+7.1	·1.5· kW class indoor unit + ·1.5· kW class indoor unit + ·7.1· kW class Hybrid for Multi
...	...

To determine the cooling capacity of the system, only take into account the capacity class of the air conditioner indoor units. Ignore the capacity index of the Hybrid for Multi.
To determine the heating/cooling capacity of the system, only take into account the capacity class of the air conditioner indoor units. Ignore the capacity index of the DHW generator for Multi.
Combination of Hybrid for Multi and air conditioner indoor units

If the air conditioning indoor units are of the cooling-only type (and heating is provided by the Hybrid for Multi only), then the heating capacity equals the Hybrid for Multi capacity index.

If the Hybrid for Multi and the air conditioner indoor units both provide heating, then calculate the heating capacity by making the sum of the Hybrid for Multi capacity index and the capacity classes of the air conditioner indoor units.

Caution: Failure to include the capacity classes of the air conditioner indoor units in the calculation will result in capacity shortage, and may result in cold draft issues and/or a shortage of refrigerant in the system.

Example

·1.5· kW class indoor unit + ·1.5· kW class indoor unit + DHW generator for Multi = 1.5 + 1.5 + 2.0

Heating/cooling capacity (Note ·1·) = 1.5 + 1.5

Combination table

OUTDOOR UNIT	INDOOR UNIT	COOLING CAPACITY (Kw)			TOTAL CAPACITY (Kw)			POWER INPUT COOLING (kW)			TOTAL CURRENT (A)			POWER FACTOR (%)
		A ROOM	B ROOM	C ROOM	Min.	Nom.	Max.	Min.	Nom.	Max.	Min.	Nom.	Max.	
3MXM40N*	1.50	1.50	---	---	1.40	1.50	2.20	0.32	0.35	0.46	1.52	1.63	2.2	91
	2.00	2.00	---	---	1.40	2.00	2.90	0.32	0.48	0.71	1.52	2.28	3.4	91
	2.50	2.50	---	---	1.40	2.50	3.10	0.32	0.64	0.82	1.52	3.05	3.9	91
	3.50	3.50	---	---	1.40	3.50	4.10	0.32	0.98	1.19	1.52	4.68	5.7	91
	1.5+1.5	1.50	1.50	---	1.60	3.00	4.20	0.34	0.59	1.14	1.63	2.82	5.44	91
	1.5+2.0	1.50	2.00	---	1.60	3.50	4.20	0.34	0.71	1.12	1.63	3.40	5.33	91
	1.5+2.5	1.50	2.50	---	1.60	4.00	4.20	0.34	0.86	1.10	1.63	4.11	5.33	91
	1.5+3.5	1.20	2.80	---	1.60	4.00	4.20	0.34	0.85	1.08	1.63	4.07	5.33	91
	2.0+2.0	2.00	2.00	---	1.60	4.00	4.50	0.34	0.84	1.09	1.63	4.02	5.22	91
	2.0+2.5	1.78	2.22	---	1.60	4.00	4.50	0.34	0.83	1.07	1.63	3.97	5.22	91
	2.0+3.5	1.45	2.55	---	1.60	4.00	4.50	0.34	0.83	1.03	1.63	3.97	5.22	91
	2.5+2.5	2.00	2.00	---	1.60	4.00	4.50	0.34	0.83	1.05	1.63	3.97	5.22	91
	2.5+3.5	1.67	2.33	---	1.60	4.00	4.50	0.34	0.82	1.01	1.63	3.92	5.22	91
	3.5+3.5	2.00	2.00	---	1.60	4.00	4.50	0.34	0.82	0.99	1.63	3.92	5.11	91
	1.5+1.5+1.5	1.33	1.33	1.33	1.70	4.00	4.60	0.36	0.78	0.98	1.74	3.73	4.68	91
	1.5+1.5+2.0	1.20	1.20	1.60	1.70	4.00	4.60	0.36	0.77	0.96	1.74	3.68	4.68	91
	1.5+1.5+2.5	1.09	1.09	1.82	1.70	4.00	4.60	0.36	0.77	0.94	1.74	3.68	4.68	91
	1.5+1.5+3.5	0.92	0.92	2.15	1.70	4.00	4.60	0.36	0.76	0.90	1.74	3.64	4.68	91
	1.5+2.0+2.0	1.09	1.45	1.45	1.70	4.00	4.60	0.36	0.77	0.92	1.74	3.68	4.68	91
	1.5+2.0+2.5	1.00	1.33	1.67	1.70	4.00	4.60	0.36	0.76	0.91	1.74	3.64	4.68	91
	1.5+2.0+3.5	0.86	1.14	2.00	1.70	4.00	4.60	0.36	0.76	0.89	1.74	3.64	4.68	91
	1.5+2.5+2.5	0.92	1.54	1.54	1.70	4.00	4.60	0.36	0.76	0.87	1.74	3.64	4.68	91
	2.0+2.0+2.0	1.33	1.33	1.33	1.70	4.00	4.60	0.36	0.76	0.85	1.74	3.64	4.68	91
	2.0+2.0+2.5	1.23	1.23	1.54	1.70	4.00	4.60	0.36	0.76	0.83	1.74	3.64	4.68	91
	2.0+2.5+2.5	1.14	1.43	1.43	1.70	4.00	4.60	0.36	0.75	0.81	1.74	3.59	4.68	91

Example

·1.5· kW class indoor unit + ·1.5· kW class indoor unit + DHW generator for Multi

In case of cooling-only air conditioner indoor units

Operating state	System Capacity
Heating mode	·5.0·kW class Hybrid for Multi
Cooling mode	·2.5·kW class indoor unit + ·3.5·kW class indoor unit

Performance characteristics

①	②	Indoor air temperature [°C WB]											
		14°C		16°C		18°C		19°C		22°C		24°C	
		TC	PI	TC	PI	TC	PI	TC	PI	TC	PI	TC	PI
		kW	kW	kW	kW	kW	kW	kW	kW	kW	kW	kW	kW
1.5+1.5	22.0	3.50	0.50	4.51	0.83	4.78	0.86	4.92	0.88	5.33	0.92	5.61	0.95
	25.0	3.50	0.60	4.34	0.89	4.62	0.92	4.76	0.93	5.17	0.98	5.44	1.01
	32.0	3.50	0.90	3.95	1.03	4.23	1.06	4.37	1.08	4.78	1.12	5.05	1.15
	35.0	3.50	1.06	3.79	1.10	4.06	1.13	4.20	1.14	4.61	1.19	4.89	1.22
	40.0	3.24	1.18	3.51	1.21	3.79	1.24	3.92	1.26	4.33	1.31	4.61	1.34
	43.0	3.07	1.26	3.34	1.29	3.62	1.32	3.76	1.33	4.17	1.38	4.44	1.41
	46.0	2.87	1.30	3.10	1.30	3.34	1.30	3.45	1.30	3.79	1.30	4.00	1.30

Notes

1. The heating capacity data are ONLY valid for heating operation by the air conditioner indoor units when there is NO domestic hot water operation by the DHW generator for Multi.
2. The DHW generator for Multi and Hybrid for Multi cannot be used as standalone units.
3. The system can only contain either the DHW generator for Multi or the Hybrid for Multi.
4. The system can only contain one DHW generator for Multi or Hybrid for Multi.
5. The Hybrid for Multi can only be combined with ·3MXM52/68N2V1B, 4MXM68/80N2V1B, 5MXM90N2V1B· outdoor units.
6. The purpose of Hybrid for Multi in combination with Multi Outdoor unit is for Heating only (space heating and DHW (by boiler only)). The target use of the air conditioner indoor unit in such a system is for cooling only.
   A combination of Hybrid and Air conditioner indoor unit, both in heating operation, is NOT the main objective of such a system.
   Hence, the heating comfort or continuous operation of the air conditioner indoor unit cannot be guaranteed over the complete operation range.
7. In case of Hybrid for Multi, capacity index ·5· corresponds to the ·CHYHBH05*· indoor unit.
   In case of Hybrid for Multi, capacity index ·7.1· corresponds to the ·CHYHBH08*· indoor unit.

3D106169D

5 Capacity tables

5 - 1 Capacity Table Legend

In order to fulfill more your requirements on quick access of data in the format you require, we have developed a tool to consult capacity tables.

Below you can find the link to the capacity table database and an overview of all the tools we have to help you select the correct product:

- **Capacity table database:** lets you find back and export quickly the capacity information you are looking for based upon unit model, refrigerant temperature and connection ratio.
- You can access the capacity table viewer here:
  https://my.daikin.eu/content/denv/en_US/home/applications/software-finder/capacity-table-viewer.html

- An overview of **all software tools** that we offer can be found here:
  https://my.daikin.eu/denv/en_US/home/applications/software-finder.html

6 Dimensional drawings

6 - 1 Dimensional Drawings

4MXM68N9

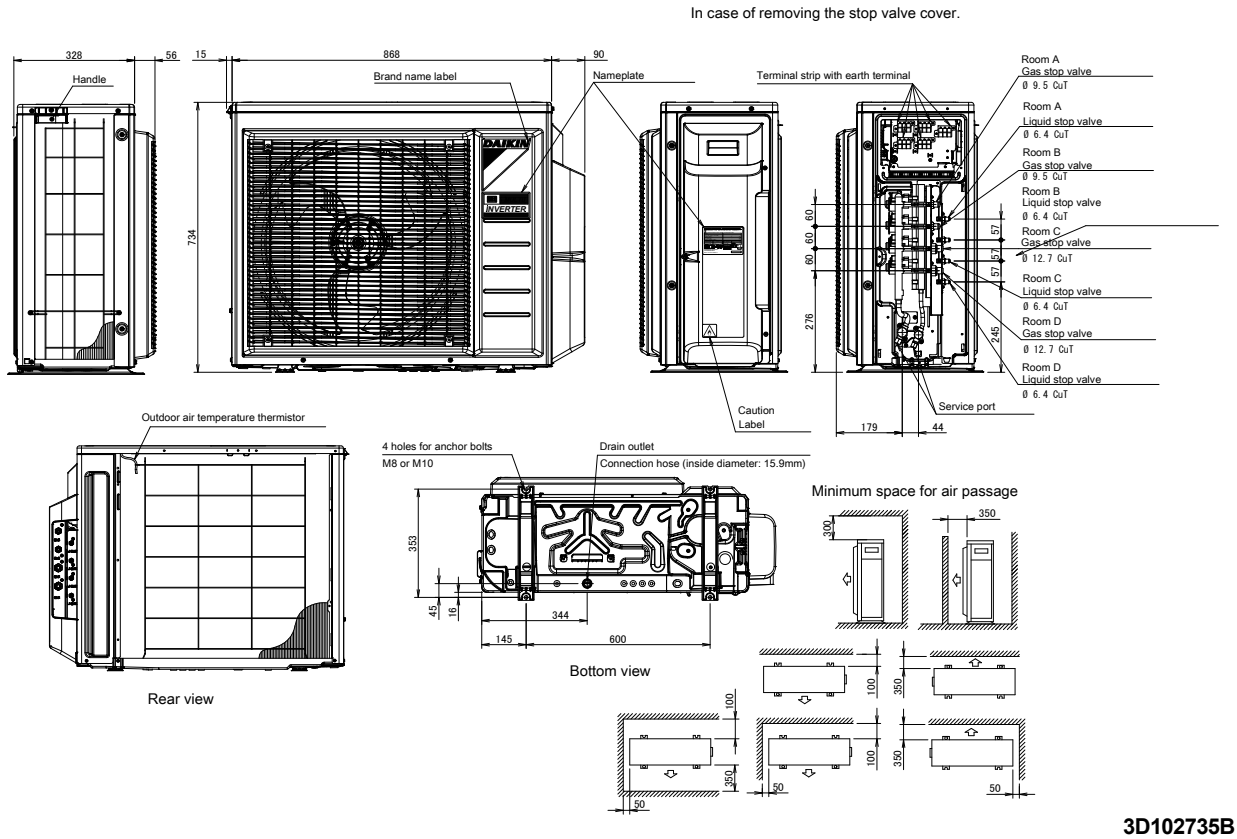

3D102735B

4MXM80N9

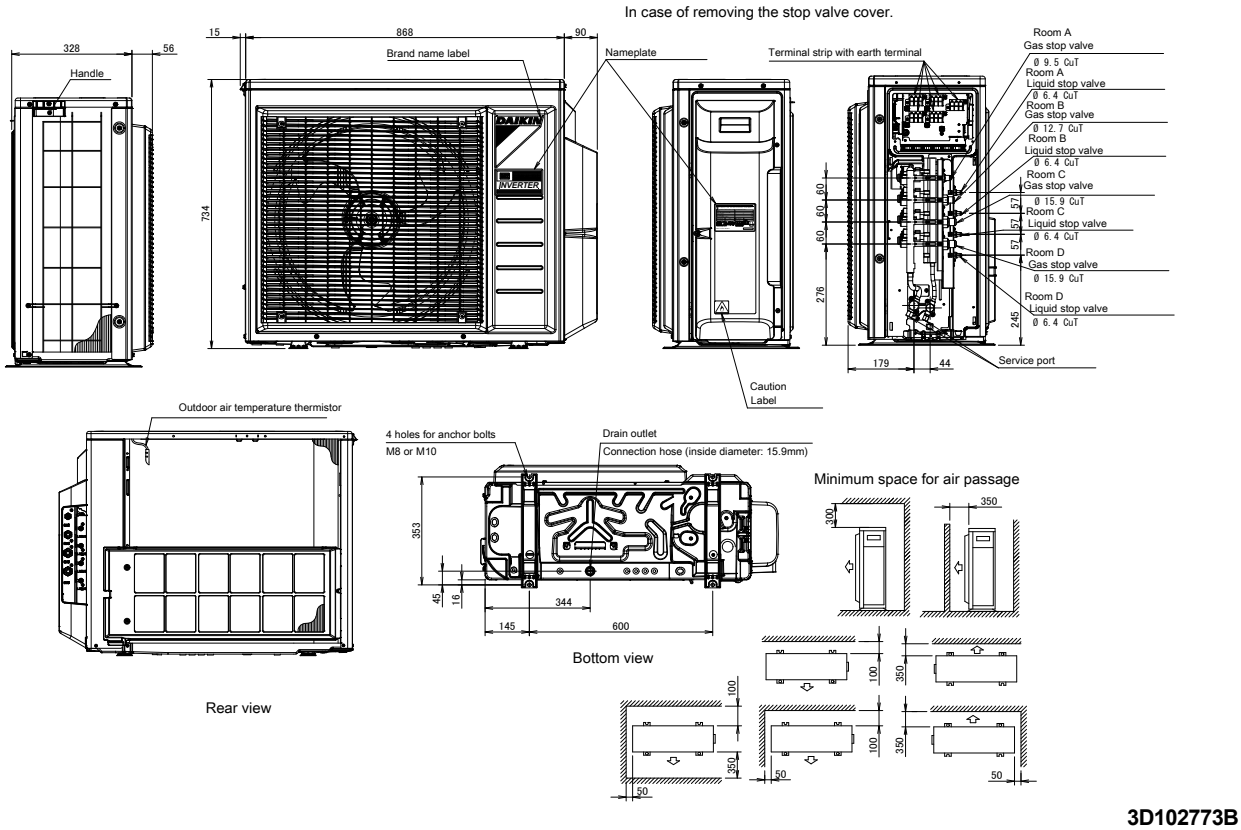

3D102773B

7 Centre of gravity

7 - 1 Centre of Gravity

4MXM68N9

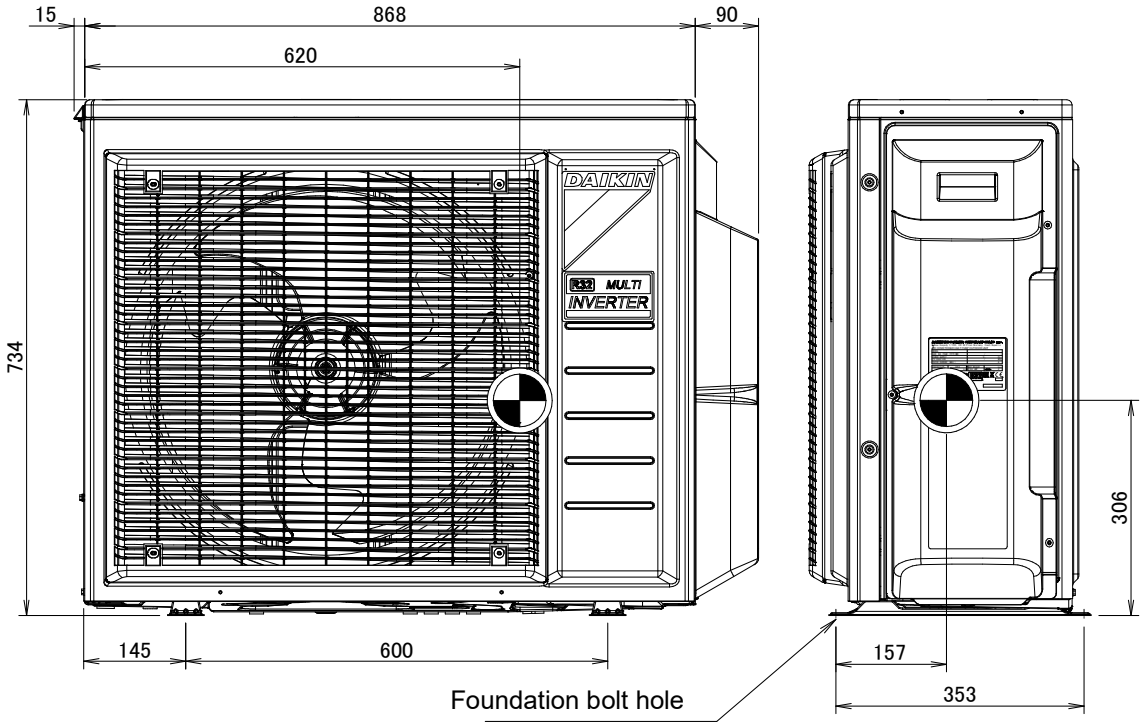

4D102822B

4MXM80N9

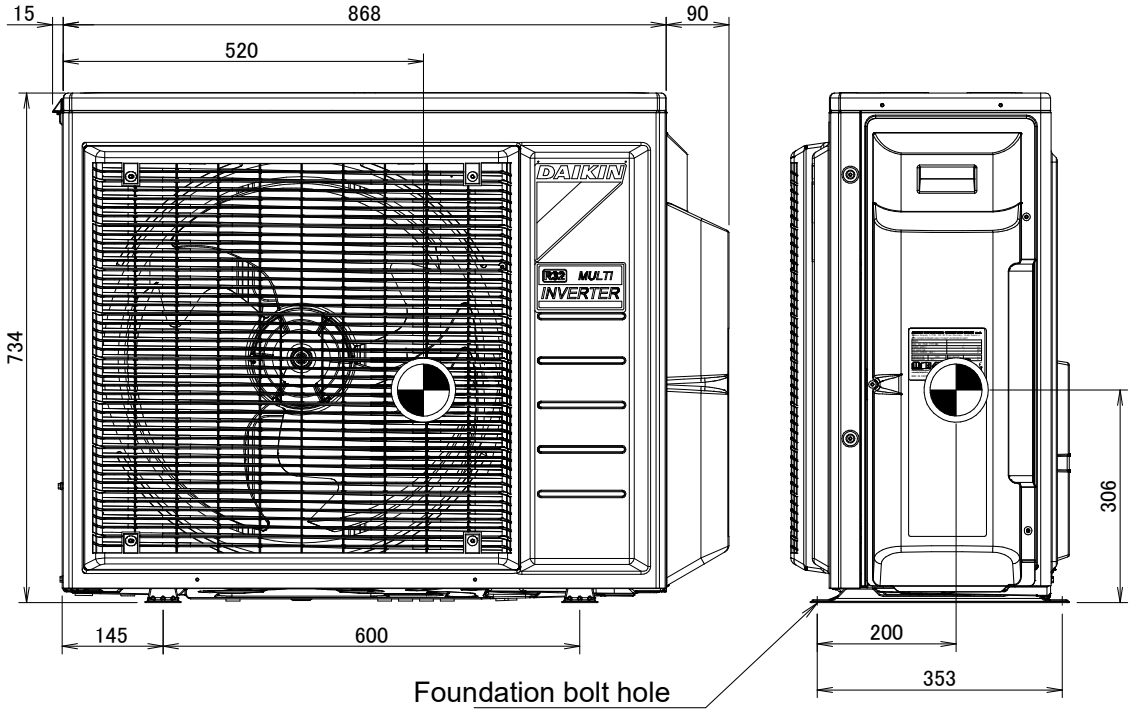

4D102821B

8 Piping diagrams

8 - 1 Piping Diagrams

4MXM68N9

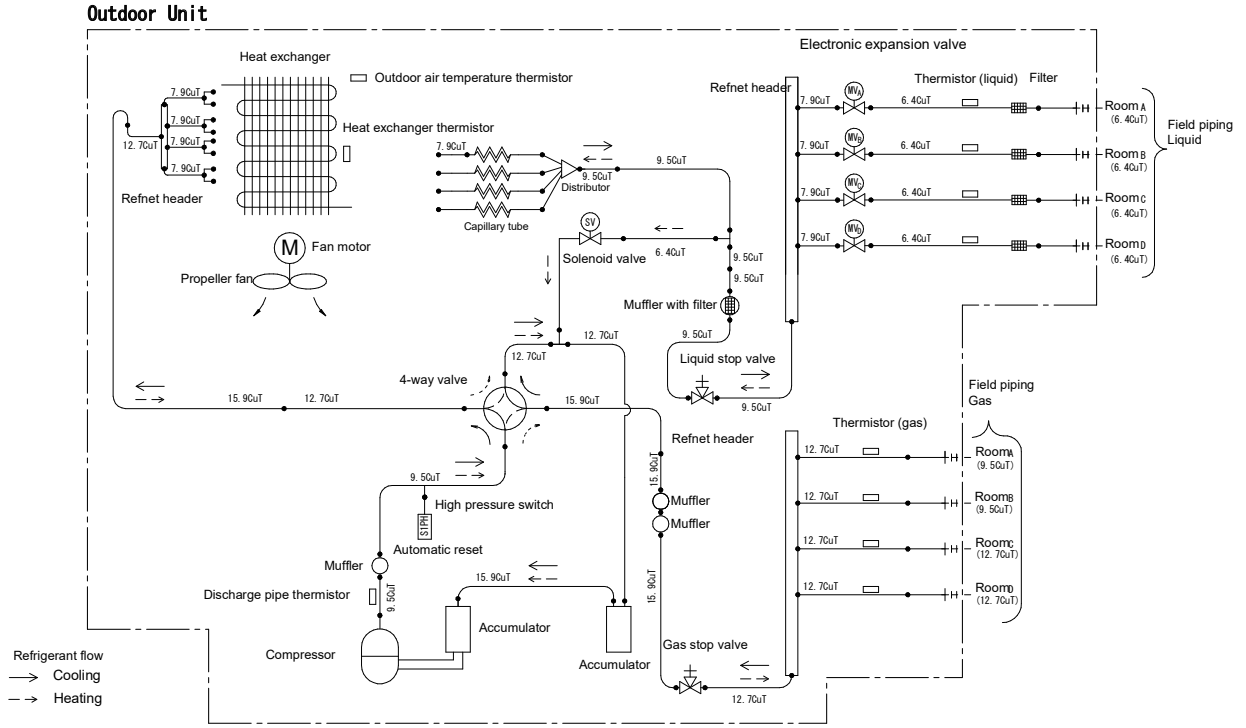

3D100787C

4MXM80N9

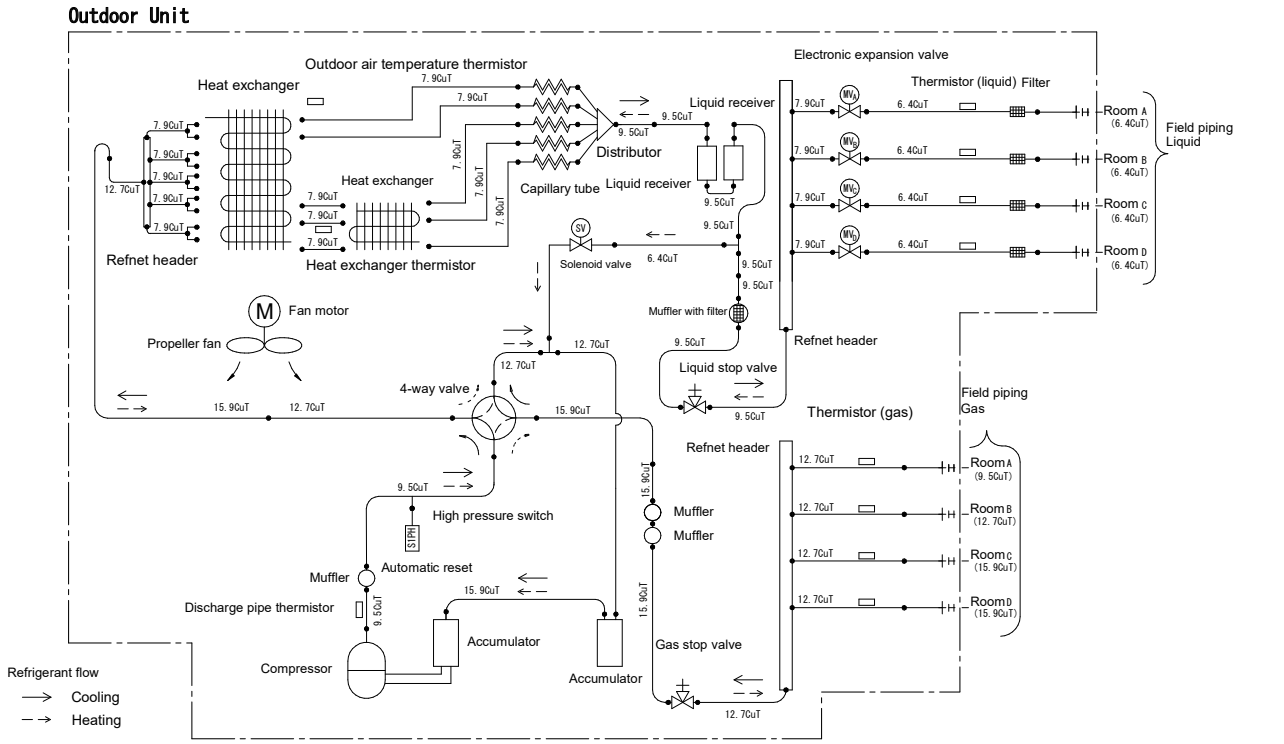

3D100791C

9 Wiring diagrams

9 - 1 Wiring Diagrams - Single Phase

4MXM-N9

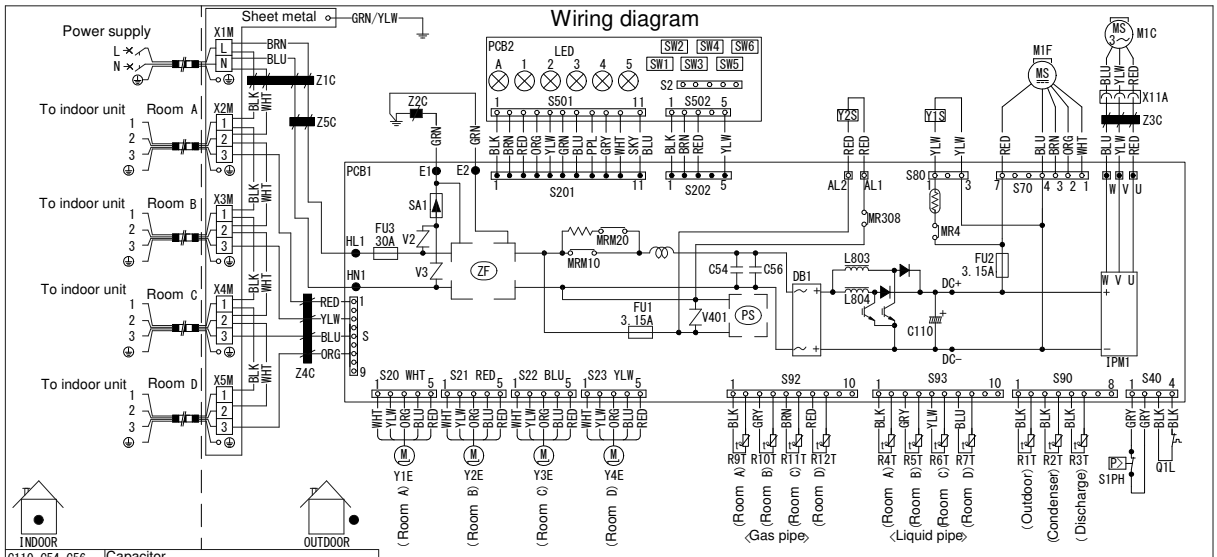

C110, C54, C56	Capacitor				
DB1	Diode bridge	Q1L	Overload protector	ZF	Noise filter
FU1, FU2, FU3	Fuse	R1T-R12T	Thermistor	S, S2-S502	Connector
IPM1	Intelligent power module	SA1	Surge arrester	U, V, W	Connector
L802, L803	Reactor	S1PH	High pressure switch	X11A, AL1, AL2	Connector
LED1-5, LEDA	Light-emitting diode	SW1-SW6	Switch		Field wiring
M1C	Compressor motor	V2, V3, V401	Varistor		Screw terminal
M1F	Fan motor	X1M-X5M	Terminal strip with earth terminal		Connector
MRM10, MRM20	Magnetic relay	Y1E-Y4E	Electronic expansion valve coil	BLK: black	GRY: grey / SKY BLU: sky blue
MR4, MR308	Magnetic relay	Y1S	Reversing solenoid valve coil	BLU: blue	ORG: orange / WHT: white
PCB1, PCB2	Printed circuit board	Y2S	Solenoid valve	BRN: brown	PPL: purple / YLW: yellow
PS	Switching power supply	Z1C-Z5C	Ferrite core	GRN: green	RED: red / 3D106249-1B

3D106249B

10 Sound data

10 - 1 Sound Pressure Spectrum

10

4MXM68N9

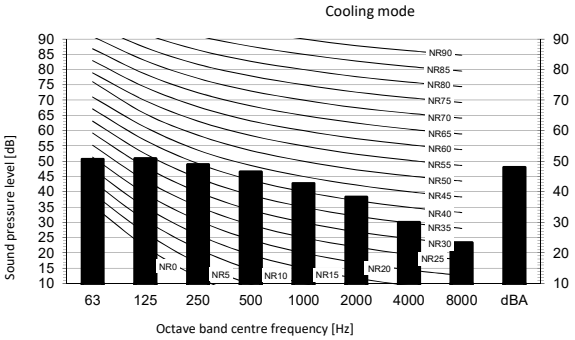

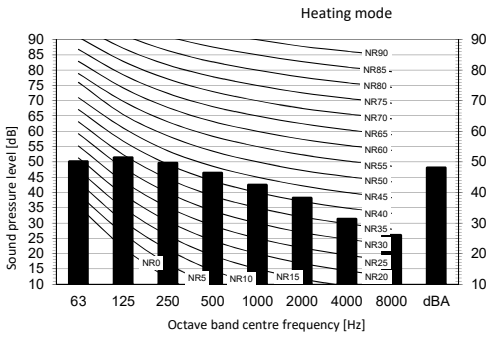

Legend

dBA = A-weighted sound pressure level (A scale according to IEC).

A Scale

B Fan speed: High

Cooling Total dB

A	B
dBA	48

Heating Total dB

A	B
dBA	49

Location of microphone

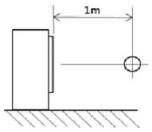

Notes

1. Operating conditions: power source 220-240 V/220 V 50/60 Hz; JIS standard
2. Background noise already taken into account.
3. Operating noise varies depending on operation and ambient conditions.
4. The operation noise measuring method is in accordance with JISC9612.
5. Measuring location: anechoic chamber
6. The values above are for connecting with the following indoor unit types:
   1.5, 2.0, 2.5, 3.5, 4.2, 5.0, 6.0 kW Class

3D106224B

4MXM80N9

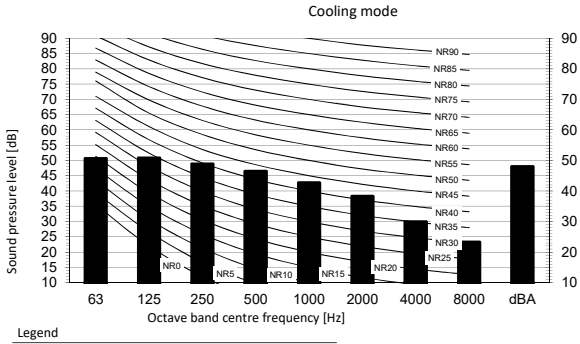

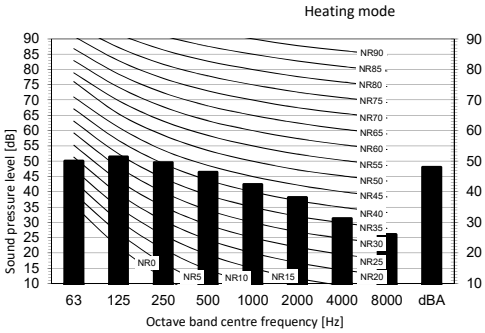

Legend

dBA = A-weighted sound pressure level (A scale according to IEC).

A Scale

B Fan speed: High

Cooling Total dB

A	B
dBA	48

Heating Total dB

A	B
dBA	49

Location of microphone

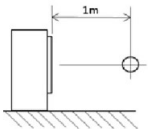

Notes

1. Operating conditions: power source 220-240 V/220 V 50/60 Hz; JIS standard
2. Background noise already taken into account.
3. Operating noise varies depending on operation and ambient conditions.
4. The operation noise measuring method is in accordance with JISC9612.
5. Measuring location: anechoic chamber
6. The values above are for connecting with the following indoor unit types:
   1.5, 2.0, 2.5, 3.5, 4.2, 5.0, 6.0, 7.1 kW Class

3D106225B

11 Operation range

11 - 1 Operation Range

4MXM-N9

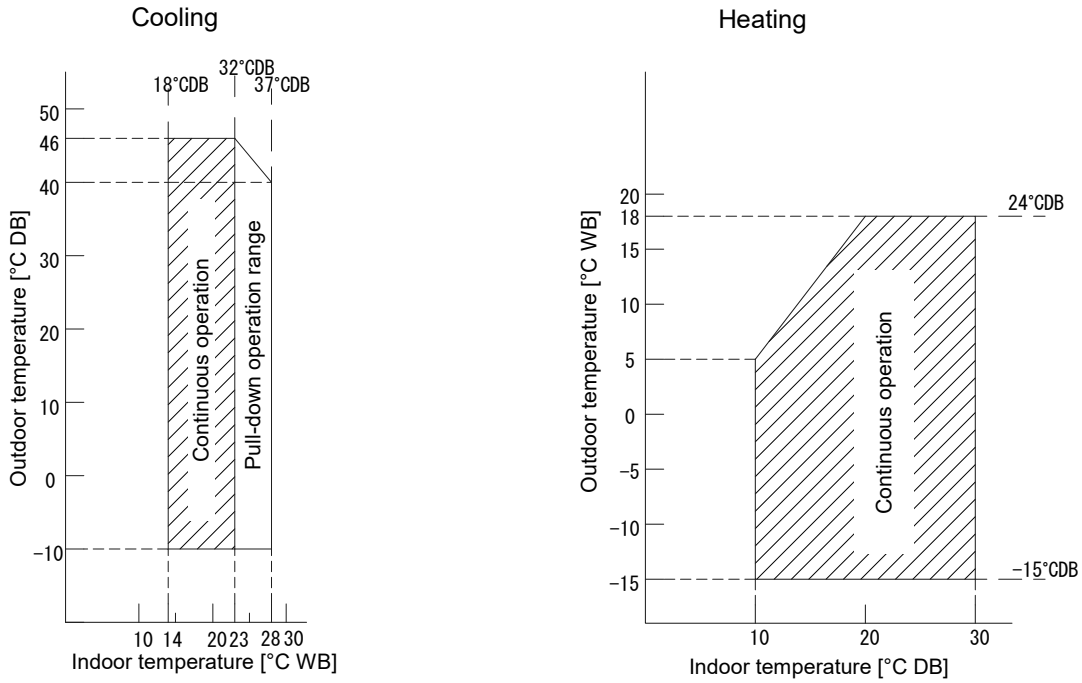

Notes
1. The ·graph· is based on the following conditions.
   Corresponding refrigerant piping length: ·5· m
   Level difference: ·0·m
   Air flow rate High

3D101376D

11 Operation range

11 - 1 Operation Range

4MXM-N9

Hybrid unit operation only

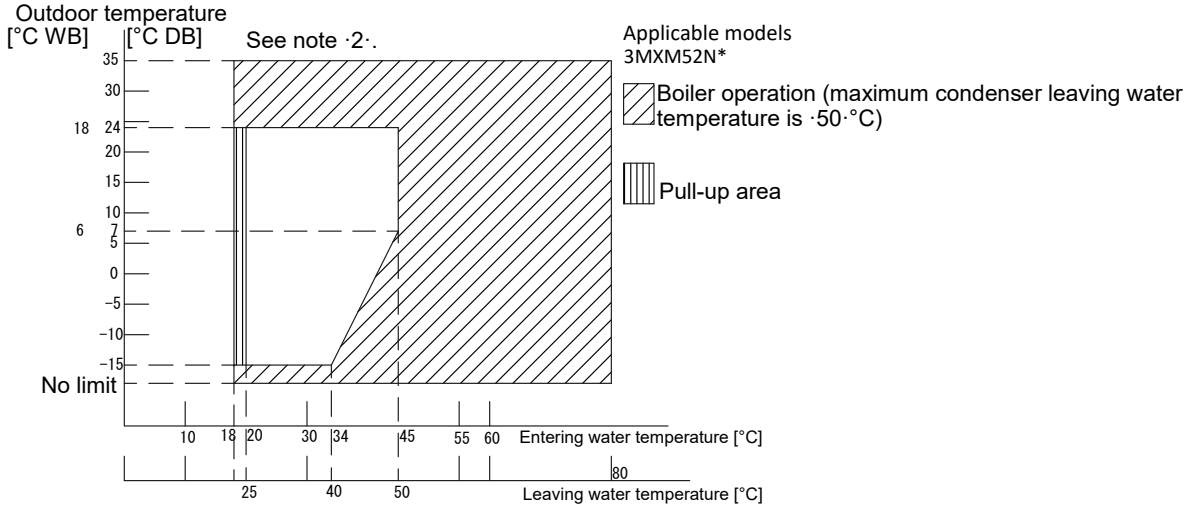

Hybrid unit operation only

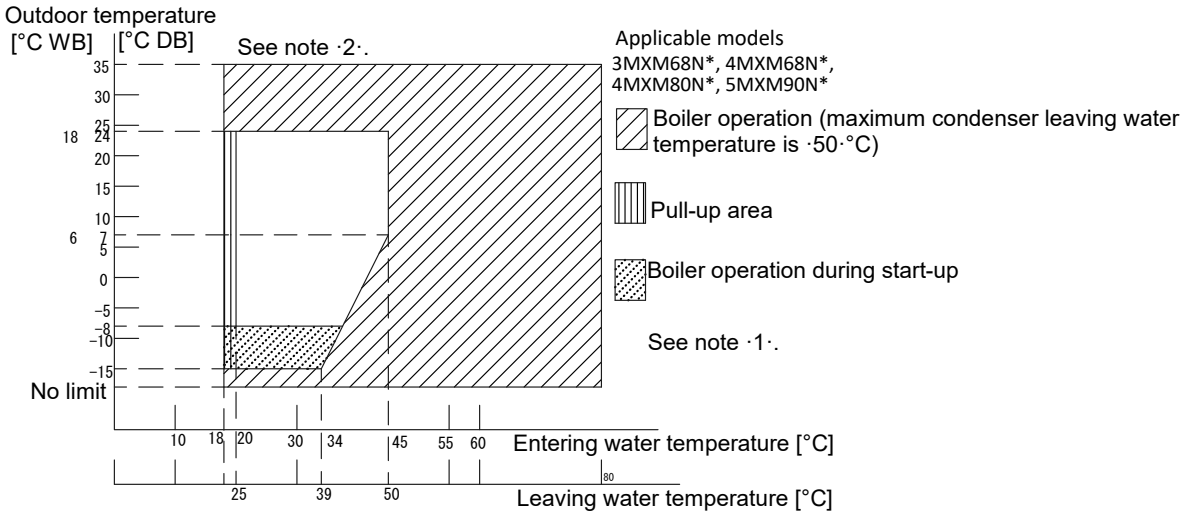

Domestic hot water heating mode

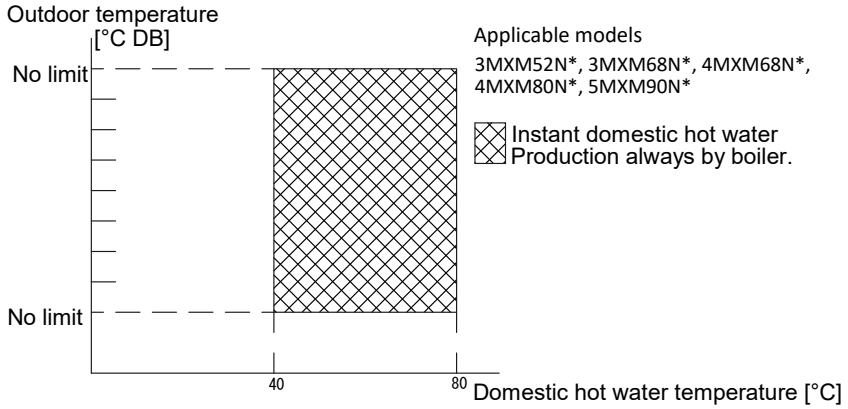

Notes

1. When the heat pump is operating and the ambient temperature drops below ·-8·°C, then the heat pump will keep operating.
2. The purpose of Hybrid for Multi in combination with Multi Outdoor unit is for Heating only (space heating and DHW (by boiler only)). The target use of the air conditioner indoor unit in such a system is for cooling only.

   A combination of Hybrid and Air conditioner indoor unit, both in heating operation, is NOT the main objective of such a system.

   Hence, the heating comfort or continuous operation of the air conditioner indoor unit cannot be guaranteed over the complete operation range.

3D109333

Daikin Europe N.V. Naamloze Vennootschap · Zandvoordestraat 300 · 8400 Oostende · Belgium · www.daikin.eu · BE 0412 120 336 · RPR Oostende (Responsible Editor)

EEDEN20 08/2020

The present leaflet is drawn up by way of information only and does not constitute an offer binding upon Daikin Europe N.V.. Daikin Europe N.V. has compiled the content of this leaflet to the best of its knowledge. No express or implied warranty is given for the completeness, accuracy, reliability or fitness for particular purpose of its content and the products and services presented therein. Specifications are subject to change without prior notice. Daikin Europe N.V. explicitly rejects any liability for any direct or indirect damage, in the broadest sense, arising from or related to the use and/or interpretation of this leaflet. All content is copyrighted by Daikin Europe N.V.